MD 195 IS ASSUMED TO RUN
IN A NORTH-SOUTH DIRECTION

EXISTING SIGNS

35 — Ethan Allen AVE 200> / Carroll AVE <7300

37 — Ethan Allen AVE <200 / Carroll AVE 7200> — D-3(2) (DUAL FACED) (VARIABLE x 16")

36 — Carroll AVE 7300> — D-3(1) (VARIABLE x 16")

44 — Carroll AVE <7200 — D-3(1) (VARIABLE x 16")

31,32 — Philadelphia AVE 00<

40,41 — Philadelphia AVE 00> — D-3(1) (DUAL FACED) (VARIABLE x 16")

34 — ONLY — R3-5R (30" X 36")

33 — LEFT TURN YIELD ON GREEN — R10-12 (36" X 42")

38,39,42 — NO TURN ON RED — R10-11B (24" X 24")

43 — ONLY — R3-5R (30" X 36")

EXISTING SIGNAL HEADS TO REMAIN

1,10,11,12,15,16,19,20,21 — R Y G — 8"

2,3,5,6,7,8,9,13 — R Y G — 12"

4 — R Y G — 12"

14 — R Y G — 12"

17,18 — R Y — 8"

22 — R Y G — 8"/12"

23,24,26-30 — 12"

NEMA PHASING

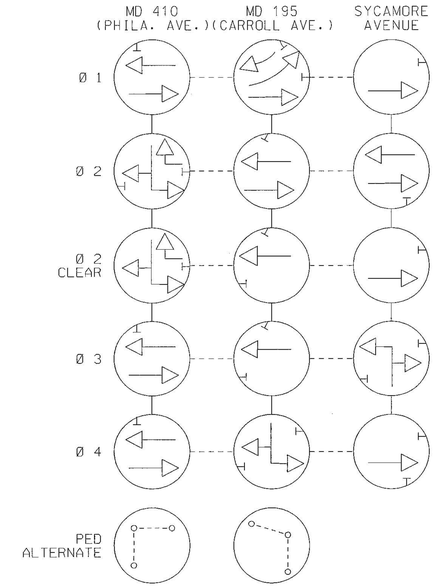

PHASING NOTES:

1. PHASES ASSOCIATED BY A SOLID LINE WILL NOT OPERATE CONCURRENTLY.
2. PHASES ASSOCIATED BY A DASHED LINE WILL OPERATE CONCURRENTLY.

CONSTRUCTION DETAILS

K. USE EXISTING CONDUIT.
L. USE EXISTING HANDHOLE.
O. REMOVE EXISTING CONCRETE SIDEWALK, INSTALL 2 IN. SCHEDULE 80, POLYVINYL CHLORIDE. ELECTRICAL CONDUIT (TRENCHED) AND REPLACE 4 IN. CONCRETE SIDEWALK.
R. REMOVE EXISTING BRICK PAVERS, INSTALL 2 IN. SCHEDULE 80, POLYVINYL CHLORIDE ELECTRICAL CONDUIT (TRENCHED) AND RESET BRICK PAVERS.
S. USE EXISTING PEDESTAL POLE. REMOVE EXISTING PEDESTRIAN PUSHBUTTON AND R10-4(1) SIGN. INSTALL 2 WIRE NAVIGATOR AUDIBLE PEDESTRIAN SIGNAL PUSHBUTTON WITH 5 IN. x 7 IN. SIGN SIZE, BLACK FACE PLATE OPTION 'A', INSTALLED WITH VIBRATING ARROW POINTING LEFT, BRAILLE TEXT AND R10-4(1) SIGN (SIGN TO READ "PUSHBUTTON TO CROSS CARROLL AVENUE"). A NEW 1/2 INCH HOLE SHALL BE DRILLED INTO THE STEEL POLE FOR THE WIRING. DISCONNECT EXISTING PUSHBUTTON ELECTRICAL CABLE, REMOVE EXISTING PEDESTRIAN PUSHBUTTON (CLEAN EXISTING DRILLED HOLE FOR WIRING WITH BRUSH AND SPRAY COLD GALVANIZING COMPOUND ON THE AFFECTED AREA) AND CONNECT ELECTRICAL CABLE TO NEW AUDIBLE PEDESTRIAN SIGNAL PUSHBUTTON.
T. INSTALL 10 FT. (TO BE CUT JUST ABOVE PUSHBUTTON) BREAKAWAY PEDESTAL POLE WITH 2-WIRE NAVIGATOR AUDIBLE PEDESTRIAN SIGNAL PUSHBUTTON WITH 5 IN. x 7 IN. SIGN SIZE, BLACK FACE PLATE OPTION 'A' INSTALLED WITH VIBRATING ARROW POINTING LEFT, BRAILLE TEXT AND R10-4(1) SIGN (SIGN TO READ "PUSHBUTTON TO CROSS CARROLL AVENUE"). (INSTALL 2-2 IN. SCHEDULE 80, 90 DEGREE POLYVINYL CHLORIDE ELECTRICAL CONDUIT BENDS IN PEDESTAL BASE.)

GENERAL NOTES

1. ALL UNDERGROUND AND OVERHEAD UTILITIES SHOWN ON THESE PLANS ARE SCHEMATIC ONLY AND MAY NOT BE COMPLETE. THE CONTRACTOR SHALL BE RESPONSIBLE FOR NOTIFYING MISS UTILITY PRIOR TO THE CONSTRUCTION SO THAT ALL UTILITIES MAY BE LOCATED IN THE FIELD. IF THE CONTRACTOR PERCEIVES THAT A CONFLICT BETWEEN UTILITIES AND THE TRAFFIC SIGNAL WILL OCCUR, THE CONTRACTOR SHALL NOTIFY THE PROJECT ENGINEER IMMEDIATELY SO THAT THE CONFLICT MAY BE RESOLVED.
2. REMOVE AND DISPOSE OF ALL UNUSED SIGNAL CABLE FROM EXISTING CONDUIT.

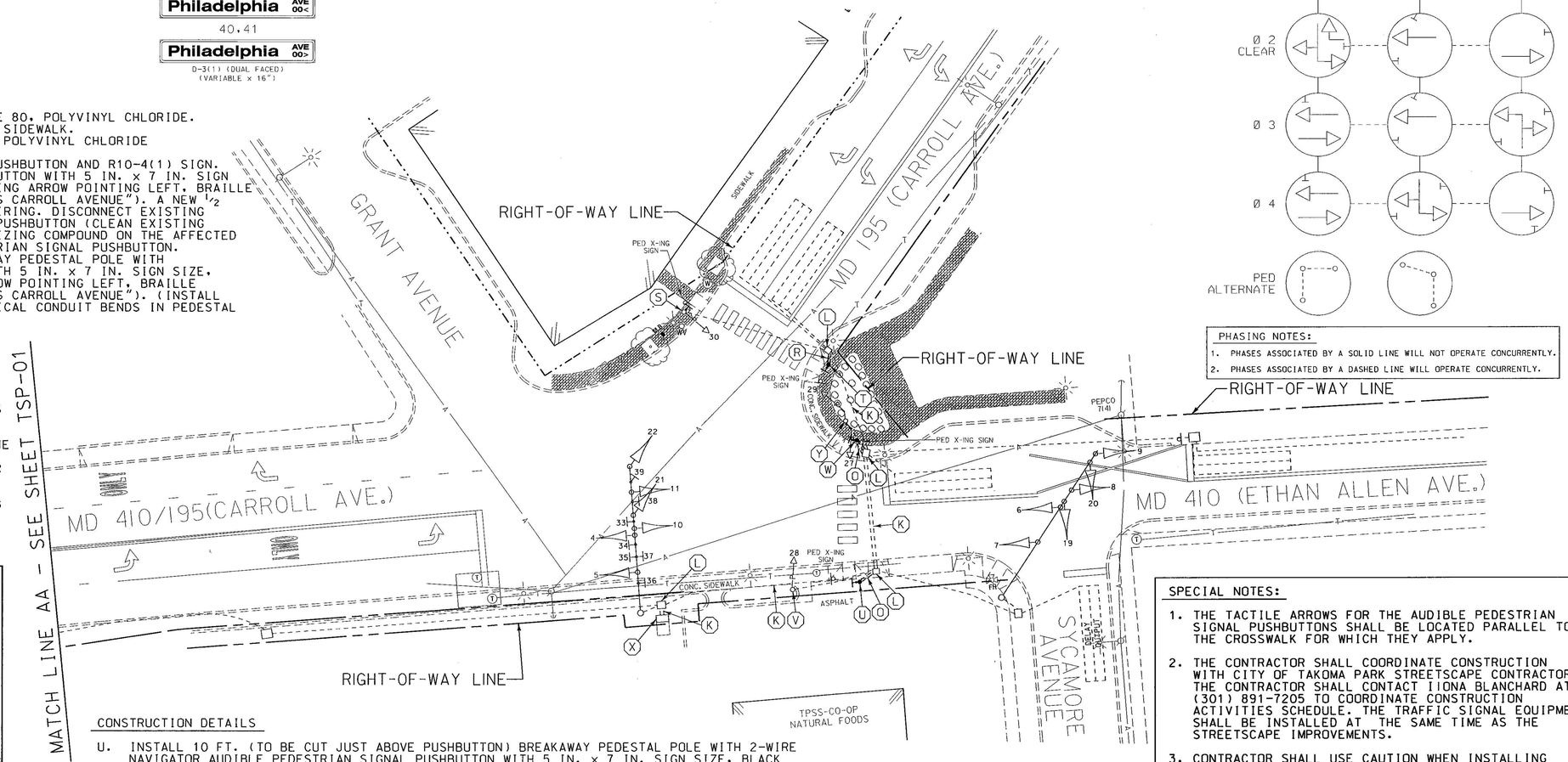

SCALE: 1" = 15'

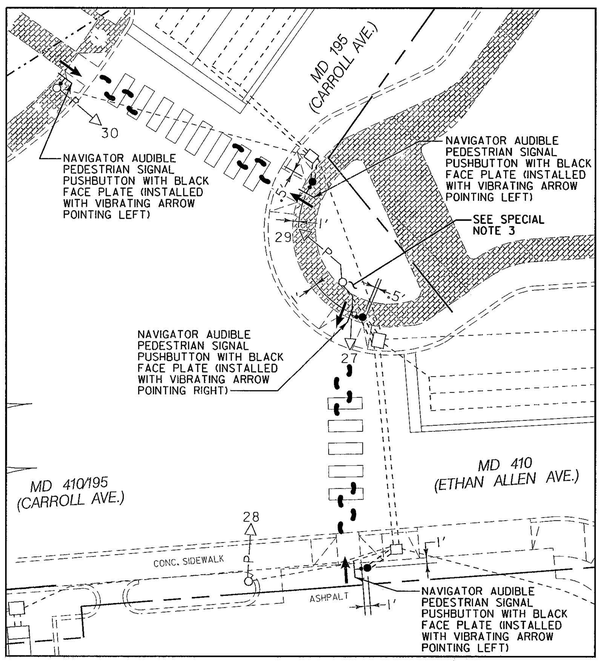

CONSTRUCTION DETAILS

U. INSTALL 10 FT. (TO BE CUT JUST ABOVE PUSHBUTTON) BREAKAWAY PEDESTAL POLE WITH 2-WIRE NAVIGATOR AUDIBLE PEDESTRIAN SIGNAL PUSHBUTTON WITH 5 IN. x 7 IN. SIGN SIZE, BLACK FACE PLATE OPTION 'A' INSTALLED WITH VIBRATING ARROW POINTING LEFT, BRAILLE TEXT AND R10-4(1) SIGN (SIGN TO READ "PUSHBUTTON TO CROSS ETHAN ALLEN AVENUE"). (INSTALL 2-2 IN. SCHEDULE 80, 90 DEGREE POLYVINYL CHLORIDE ELECTRICAL CONDUIT BENDS IN PEDESTAL BASE.)
V. USE EXISTING PEDESTAL POLE. REMOVE EXISTING PEDESTRIAN PUSHBUTTON AND R10-4(1) SIGN AND CLEAN EXISTING DRILLED HOLE FOR WIRING WITH BRUSH AND SPRAY COLD GALVANIZING COMPOUND ON THE AFFECTED AREA.
W. INSTALL 10 FT. (TO BE CUT JUST ABOVE PUSHBUTTON) BREAKAWAY PEDESTAL POLE WITH 2-WIRE NAVIGATOR AUDIBLE PEDESTRIAN SIGNAL PUSHBUTTON WITH 5 IN. x 7 IN. SIGN SIZE, BLACK FACE PLATE OPTION 'A' INSTALLED WITH VIBRATING ARROW POINTING RIGHT, BRAILLE TEXT AND R10-4(1) SIGN (SIGN TO READ "PUSHBUTTON TO CROSS ETHAN ALLEN AVENUE"). (INSTALL 2-2 IN. SCHEDULE 80, 90 DEGREE POLYVINYL CHLORIDE ELECTRICAL CONDUIT BENDS IN PEDESTAL BASE.)
X. USE EXISTING BASE MOUNTED CABINET AND CONTROLLER AND INSTALL CENTRAL CONTROL UNIT IN CABINET.
Y. REMOVE EXISTING PEDESTRIAN PUSHBUTTONS (2) AND R10-4(1) (2) SIGNS FOR CROSSING "CARROLL AVE" AND "ETHAN ALLEN AVE".

SPECIAL NOTES:

1. THE TACTILE ARROWS FOR THE AUDIBLE PEDESTRIAN SIGNAL PUSHBUTTONS SHALL BE LOCATED PARALLEL TO THE CROSSWALK FOR WHICH THEY APPLY.
2. THE CONTRACTOR SHALL COORDINATE CONSTRUCTION WITH CITY OF TAKOMA PARK STREETSCAPE CONTRACTOR. THE CONTRACTOR SHALL CONTACT IIONA BLANCHARD AT (301) 891-7205 TO COORDINATE CONSTRUCTION ACTIVITIES SCHEDULE. THE TRAFFIC SIGNAL EQUIPMENT SHALL BE INSTALLED AT THE SAME TIME AS THE STREETSCAPE IMPROVEMENTS.
3. CONTRACTOR SHALL USE CAUTION WHEN INSTALLING SIGNAL EQUIPMENT TO AVOID DISTURBANCE OF EXISTING UNDERGROUND SIGNAL EQUPMENT. CONTRACTOR SHALL TEST PIT TO DETERMINE EXACT LOCATION AND DEPTH OF UNDERGROUND UTILITIES PRIOR TO INSTALLING SIGNAL EQUIPMENT.

TSP-2

LEGEND OF UNDERGROUND AND OVERHEAD UTILITIES

AERIAL CABLE	A
ELECTRICAL	E
TELEPHONE	T
GAS	G
SEWER	SS
STORM DRAIN	SD
WATER	W
CABLE TV	TV

WR&A
Whitman, Requardt and Associates, LLP
801 South Caroline Street
Baltimore, Maryland 21231
(410) 235-3450

REVISIONS

E1	REVISION NO.1. REVISED AUDIBLE PEDESTRIAN POLE LOCATIONS CONTRACT NO. AT5825185	6/1/05
E	ADDED AUDIBLE PFDESTRIAN PUSHBUTTONS CONTRACT NO. AT5825185	4/29/05
D	ADDED OPTICALLY PROGRAMMED SIGNAL HEADS NOS. 6,7 AND REPLACED LOOP DETECT. SHA NO. AT3575185	10/10/03
△	REVISED I/C TO OVERHEAD AND CONDUIT RUNS CHANGE	7/23/79

SRB | NML | N.M.L. | S.R.

APPROVALS

TEAM LEADER - TRAFFIC ENGINEERING DESIGN DIVISION
ASST. TRAFFIC ENGINEERING DESIGN DIVISION
CHIEF - TRAFFIC ENGINEERING DESIGN DIVISION
DIRECTOR, TRAFFIC & SAFETY

ORIGINAL ON FILE

MARYLAND DOT - STATE HIGHWAY ADMINISTRATION
Office of Traffic & Safety

TRAFFIC ENGINEERING DESIGN DIVISION
TRAFFIC SIGNALIZATION PLAN
MD 195 (CARROLL AVE.) @ MD 410 (PHILADELPHIA AVE.) AND MD 410 (ETHAN ALLEN AVE.) @ MD 195 (CARROLL AVE.)/GRANT AVE./SYCAMORE AVE. (TAKOMA PARK, MD)

DRAWN BY:	J. GORDON	F.A.P. NO.		TS NO.	SHEET NO.
CHECKED BY:	D. ZAFRIS	S.H.A. NO.	M-320-501-385	TS-860 E1	
SCALE:	1" = 20'	COUNTY:	MONTGOMERY	T.I.M.S. NO.	
DATE:	6/30/75	LOG MILE:	15019500.46	G796	2 OF 4

ni:\20008\md410&md195\md195&Phila\tsp02md195.dgn