F.H.W.A. REGION NO.	STATE	FED. AID PROJ. NO.	SHEET NO.	TOTAL SHEETS
3	MD			

MD 193 ASSUMED TO RUN IN EAST-WEST DIRECTION

SIGNS

12 — R3-5 30"X36"

13 — R3-6 30"X36"

14 — D3-2 VARIABLEX16"

EAST / MARYLAND / 193 — M3-2 30"X15", M1-6 48"X36", M6-1 30"X24"

48"X75"
ONE PIECE SHIELD ASSEMBLY ON THE BLACK BACKGROUND

15 — R6-1L 36"X12"

17 — R5-1 30"X30"

18,19 — R10-3C 9"X12"

20 — R10-3C 9"X12"

21,22 — 48"X48" W3-3

10 — R3-2 36"X36"

11 — R6-1R 36"X12"

SIGNALS

2,3,5,6 — 3M

1,4 — 12"

7,8,9,10 — 12"

NEMA PHASING

Ø 2, Ø 4, Ø 4 ALT., FLASHING OPERATION

PHASING NOTES:
1. Phases associated by a solid line will not operate concurrently.
2. Phases associated by a dashed line will operate concurrently.

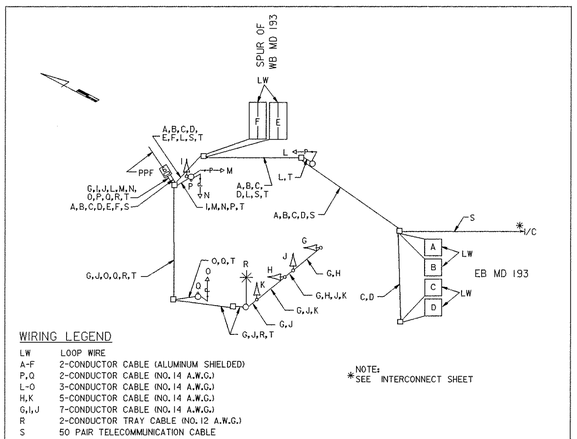

WIRING LEGEND

LW	LOOP WIRE
A-F	2-CONDUCTOR CABLE (ALUMINUM SHIELDED)
P,Q	2-CONDUCTOR CABLE (NO. 14 A.W.G.)
L-O	3-CONDUCTOR CABLE (NO. 14 A.W.G.)
H,K	5-CONDUCTOR CABLE (NO. 14 A.W.G.)
G,I,J	7-CONDUCTOR CABLE (NO. 14 A.W.G.)
R	2-CONDUCTOR TRAY CABLE (NO. 12 A.W.G.)
S	50 PAIR TELECOMMUNICATION CABLE
T	GROUND WIRE (NO. 6 A.W.G.)
PF	POWER FEED BY PEPCO

*NOTE: SEE INTERCONNECT SHEET

WIRING DIAGRAM

	1	2	3	4	5	6	7	8	9
	R Y G	R Y G	R Y G	R Y G	R Y G	DW WK	DW WK	DW WK	DW WK
PHASE 2	G	G	R	R	R	WK	WK	DW	DW
PED. CLEAR.	G	G	R	R	R	FL/DW	FL/DW	DW	DW
PHASE 2 CHANGE	Y	Y	R	R	R	DW	DW	DW	DW
PHASE 4	R	R	G	G	G	DW	DW	DW	DW
4 CHANGE	R	R	Y	Y	Y	DW	DW	DW	DW
PHASE 4 ALT.	R	R	G	G	G	DW	DW	WK	WK
PED. CLEAR.	R	R	G	G	G	DW	DW	FL/DW	FL/DW
4 ALT. CHANGE	R	R	Y	Y	Y	DW	DW	DW	DW
FLASHING OPERATION	FL/Y	FL/Y	FL/R	FL/R	FL/R	DARK	DARK	DARK	DARK

PHASING CHART

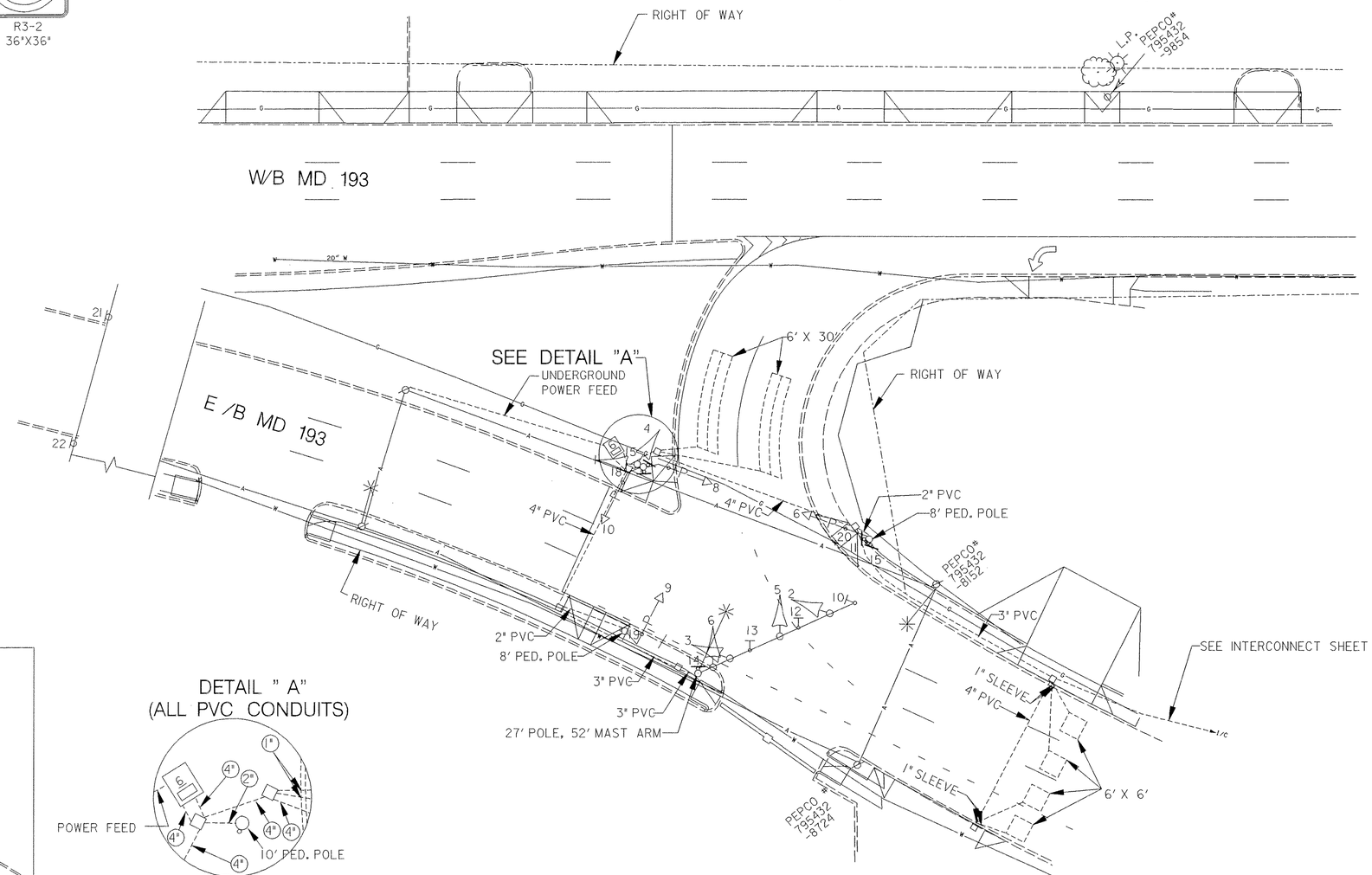

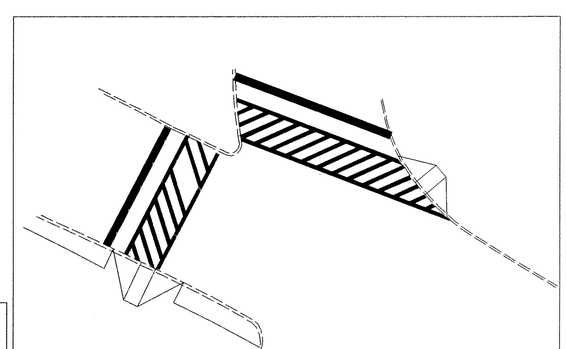

"PAVEMENT MARKING DETAIL"

DETAIL " A"
(ALL PVC CONDUITS)

UTILITY LEGEND

S	SEWER
T	TELEPHONE
W	WATER
G	GAS
E	ELECTRIC
A	AERIAL
I/C	INTERCONNECT

SABRA & ASSOCIATES, INC.
9881 BROKEN LAND PARKWAY
COLUMBIA, MD 21046

REVISIONS:					APPROVALS:
A AS BUILT M 425-502-370				3/28/97	
RAVI					CHIEF SIGNAL DESIGN SECTION
					ASST. DISTRICT ENGINEER TRAFFIC
					CHIEF TRAFFIC ENGINEERING DESIGN DIVISION
					DIRECTOR OFFICE OF TRAFFIC & SAFETY

MDOT - STATE HIGHWAY ADMINISTRATION
Office of Traffic & Safety
TRAFFIC ENGINEERING DESIGN DIVISION

LOG MILE # 15019304.22

DRAWN BY: ZAJ
DES. BY: ZAJ
CHK. BY:

EB MD 193 @ SPUR OF WB MD 193
SIGNAL PLAN

COUNTY: MONTGOMERY

DATE: SEPTEMBER, 1995 F.A.P. NO.
SCALE: 1"=20' S.H.A. NO. M 425-502-370

TS/STD. NO.: TS-3533-A

SHEET NO. ___ OF ___