F.H.W.A. REGION NO.	STATE	FED. AID PROJ. NO.	SHEET NO.	TOTAL SHEETS
3	MD			

WIRING DIAGRAM

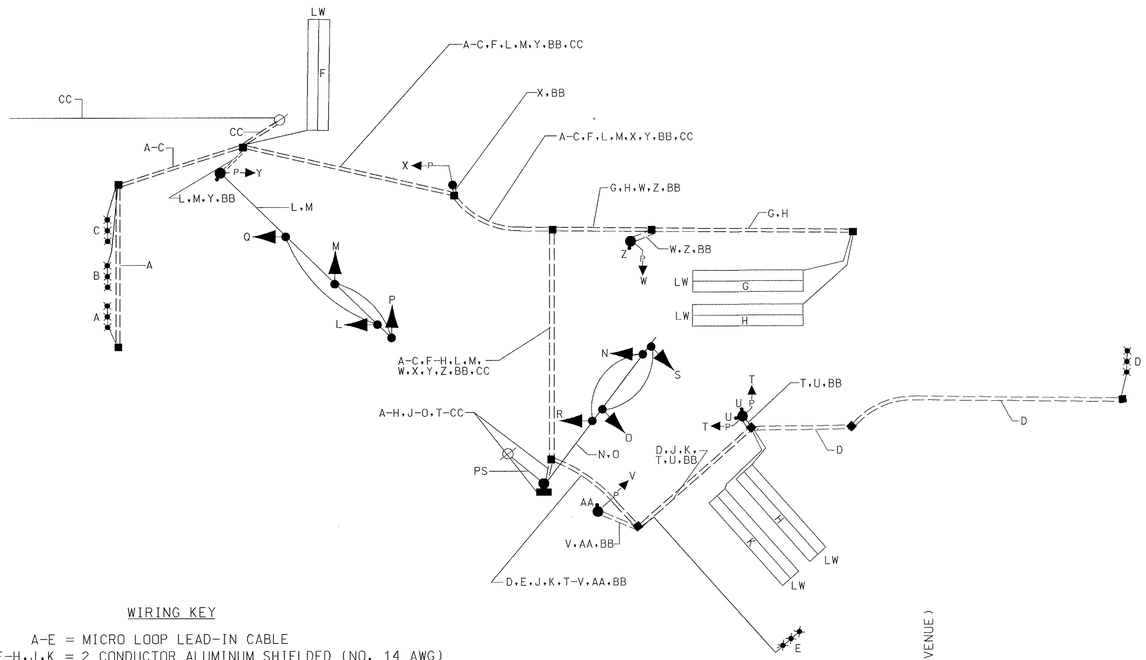

WIRING KEY

A-E = MICRO LOOP LEAD-IN CABLE
F-H,J,K = 2 CONDUCTOR ALUMINUM SHIELDED (NO. 14 AWG)
L-O = 7 CONDUCTOR CABLE (NO. 14 AWG)
P-S = 5 CONDUCTOR CABLE JUMPER FOR SIGNAL HEADS (NO. 14 AWG)
T,U = 5 CONDUCTOR CABLE (FOR PEDESTRIAN SIGNALS AND NO. 14 AWG)
V-Y = 3 CONDUCTOR CABLE (NO. 14 AWG)
Z,AA = 2 CONDUCTOR CABLE (NO. 14 AWG)
BB = 6 CONDUCTOR NO. 6 STRANDED BARE COPPER WIRE
CC = 12 PAIR SELF SUPPORTING INTERCONNECT CABLE (NO. 19 AWG)
LW = LOOP WIRE
PS = PROPOSED POWER SERVICE (NO POLE # DISPLAYED)

PHASING SEQUENCE CHART

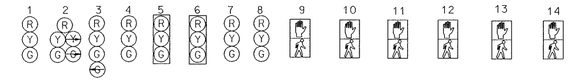

	1	2	3	4	5	6	7	8	9	10	11	12	13	14
Phase 1	G	G/~~O~~	R	R	R	R	R	R	DW	DW	DW	DW	DW	DW
Phase 1 Clear	Y	Y/~~O~~	R	R	R	R	R	R	DW	DW	DW	DW	DW	DW
Phase 2	R	R/~~O~~	G/~~G~~	G	R	R	R	R	DW	DW	DW	DW	DW	DW
Phase 2 Clear	R	R/~~Y~~	Y	Y	R	R	R	R	DW	DW	DW	DW	DW	DW
Phase 3	R	R	R	R	G	G	R	R	W	DW	DW	W	DW	DW
Ped. Clear	R	R	R	R	G	G	R	R	FL/DW	DW	DW	FL/DW	DW	DW
Phase 3 Clear	R	R	R	R	Y	Y	R	R	DW	DW	DW	DW	DW	DW
Phase 3 Alt.	R	R	R	R	G	G	R	R	W	W	W	W	DW	DW
Ped. Clear	R	R	R	R	G	G	R	R	FL/DW	FL/DW	FL/DW	FL/DW	DW	DW
Phase 3 Alt. Clear	R	R	R	R	Y	Y	R	R	DW	DW	DW	DW	DW	DW
Phase 4	R	R	R	R	R	R	G	G	DW	DW	DW	DW	DW	DW
Phase 4 Clear	R	R	R	R	R	R	Y	Y	DW	DW	DW	DW	DW	DW
Phase 4 Alt.	R	R	R	R	R	R	G	G	DW	DW	DW	DW	W	W
Ped. Clear	R	R	R	R	R	R	G	G	DW	DW	DW	DW	FL/DW	FL/DW
Phase 4 Alt. Clear	R	R	R	R	R	R	Y	Y	DW	DW	DW	DW	DW	DW
Flashing Operation	FL/R	FL/R	FL/R	FL/R	FL/R	FL/R	FL/R	FL/R	DARK	DARK	DARK	DARK	DARK	DARK

LEGEND

R = Red indication
Y = Yellow indication
G = Green indication
YA = Yellow arrow indication
GA= Green arrow indication
FL = Flashing
W = Walk
DW = Dont Walk

INTERCONNECT PLAN (NOT TO SCALE)

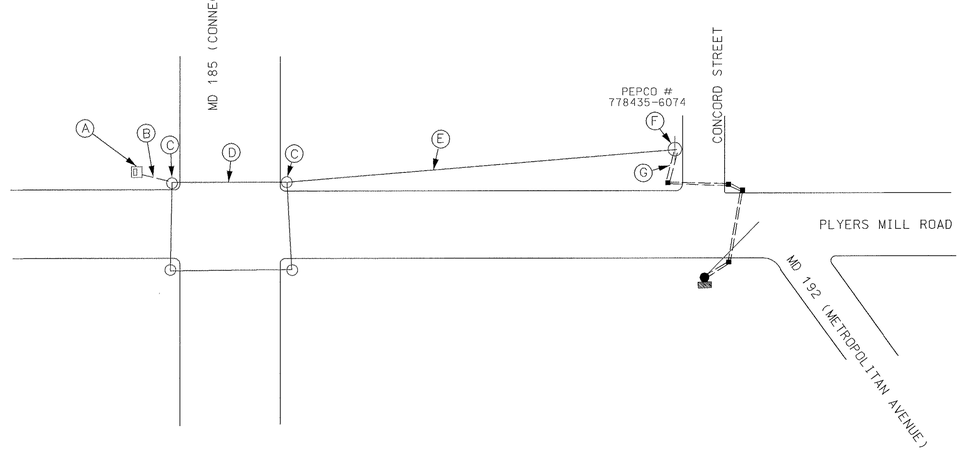

INTERCONNECT CONSTRUCTION DETAIL

A = Install proposed 12 pair interconnect cable into existing controller cabinet
B = Use existing conduit
C = Use existing strain pole
D = Install proposed 12 pair interconnect cable on existing span wire and rering
E = Install proposed 12 pair interconnect cable (overhead)
F = Install 2½" PVC schdedule 80 electrical conduit riser
G = See traffic signal installation plan sheet for details
H = Install 2" PVC schedule 40 electrical conduit (trenched)
P/S = PROPOSED SERVICE

REVISIONS	APPROVALS
	ASST. DIVISION CHIEF, TEDD
	ASST. DISTRICT ENGINEER, TRAFFIC
	CHIEF, TRAFFIC ENGINEERING DESIGN DIVISION
	DIRECTOR, OFFICE OF TRAFFIC & SAFETY

DCL
CONSULTING ENGINEERS
COLUMBIA, MARYLAND

MARYLAND DOT - STATE HIGHWAY ADMINISTRATION
Office of Traffic & Safety
TRAFFIC ENGINEERING DESIGN DIVISION

MD 192 (PLYERS MILL RD.) AND CONCORD STREET/MD 192 (METROPOLITAN AVE.)

LOGMILE #:15019200.29 DATE 4/ /96

DRAWN BY: R.C./L.S.C.	F.A.P. NO.	STPG-000S(588)E	PLAN SHEET NO.:	SHEET NO.
CHECK BY:	S.H.A. NO.	AW 27A5F/85F	TS 3571	4 OF 5
SCALE: NTS	COUNTY	MONTGOMERY		

NTS