F.H.WA. REGION NO.	STATE	FED. AID PROJ. NO.	SHEET NO.	TOTAL SHEETS
3	MD.			

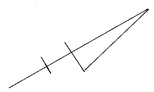

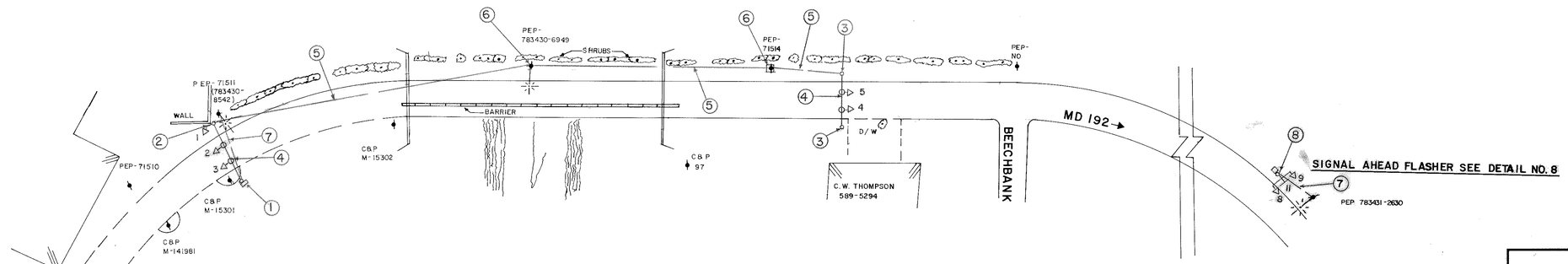

SIGNAL AHEAD FLASHER SEE DETAIL NO. 8

AMMCO STATION

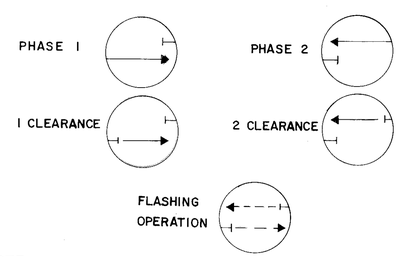

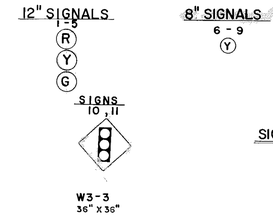

NOTE :

1. ALL POLE & SIGNAL LOCATIONS TO BE DETERMINED BY SIGNAL DESIGN SECTION.
2. R/W APPROX. 30' MAX.

SIGNAL AHEAD FLASHER DETAIL NO. 8

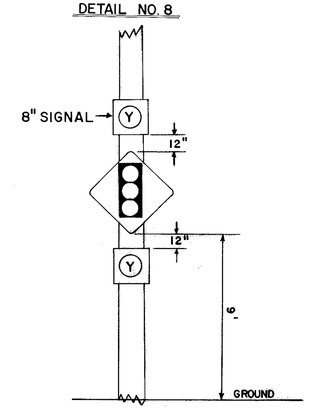

APPROVAL: REGIONAL TRAFFIC ENGINEER

APPROVAL: CHIEF-BUREAU OF TRAFFIC ENGINEERING 10/26/79

APPROVAL: ASS'T. CHIEF ENGINEER TRAFFIC 10/29/79

REVISIONS

STATE OF MARYLAND
DEPARTMENT OF TRANSPORTATION
STATE HIGHWAY ADMINISTRATION

TRAFFIC DIVISION — BUREAU OF TRAFFIC ENGINEERING

TEMPORARY TRAFFIC SIGNAL AT MD 391 - MD 192 ONE LANE BRIDGE

SCALE 1" = 40' DATE 10/19/79 CONTRACT NO. M-394-451-375

DRAWN BY: S.R. COUNTY: MONTGOMERY

DESIGNED BY: STEVE RENZI SIGNAL NO.:

CHECKED BY: 10/26/79

DRAWING NO. TS- 1745

BRUNING 44-511 19927