DRILL HOLES

BORDER REV. DATE: June 1, 2004

MD 188 IS ASSUMED TO RUN IN AN EAST/WEST DIRECTION

PROPOSED SIGNS

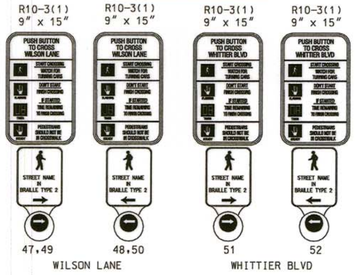

EXISTING SIGNS

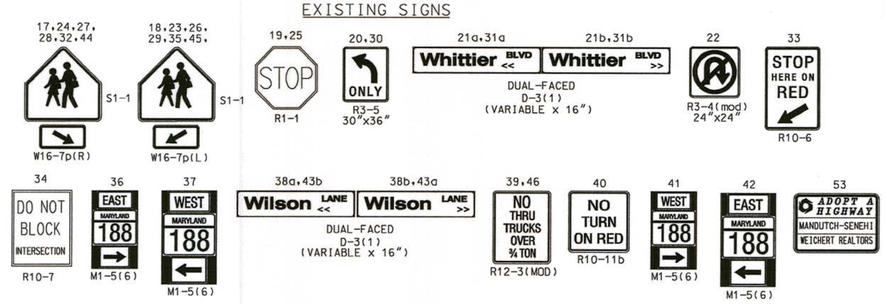

PROPOSED LED SIGNALS

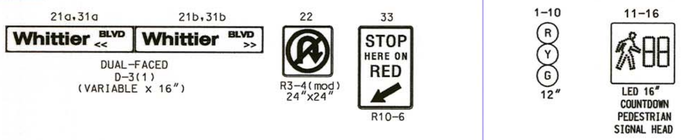

NEMA PHASING

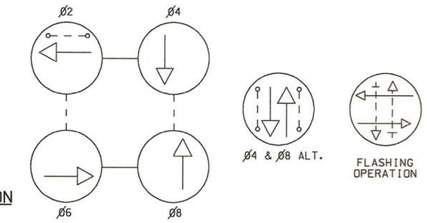

PHASING NOTES:
1.) PHASES ASSOCIATED BY A DASHED LINE WILL OPERATE CONCURRENTLY
2.) PHASES ASSOCIATED BY A SOLID LINE WILL NOT OPERATE CONCURRENTLY

EXISTING VIDEO DETECTION

- VIDEO DETECTION CAMERA, (a-d)

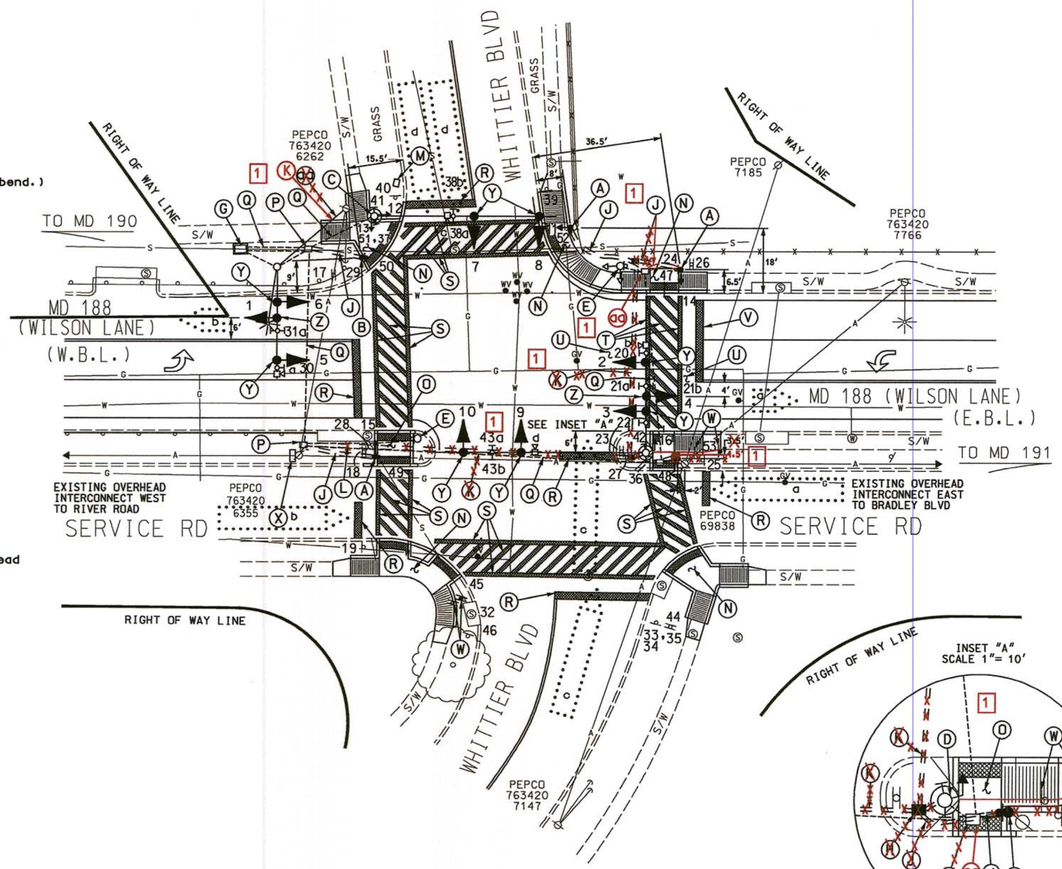

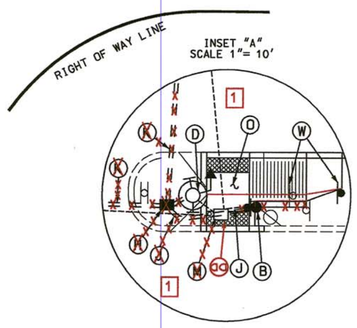

CONSTRUCTION DETAILS

A. Install 10' pedestal pole with breakaway couplings (Std No. MD 801.01-01). Countdown pedestrian signal head and audible pushbutton with pedestrian education sign as shown. (Note: 1-2", 90°polyvinyl chloride (Schedule 80) bend.)

B. Install 5' pedestal pole with breakaway couplings (Std No. MD 801.01-01), and audible pushbutton with pedestrian education sign as shown. (Note: 1-2". 90°polyvinyl chloride (Schedule 80) bend.)

C. Remove existing pedestrian signal heads, pushbutton and pedestrian education sign. Install Countdown pedestrian signal heads, audible pushbutton and pedestrian education sign as shown.

1 D. Remove existing pedestrian signal head, pushbutton and pedestrian education sign. Plug pushbutton hole. Install Countdown pedestrian signal head as shown. ~~(Note: Contractor shall install 3" bend into existing signal pole foundation. Disconnect existing traffic signal and video camera cables on both mast arms from the controller and pull back to the pole base. Signal heads and video detection cameras wiring shall be rerouted thru new conduit. See Wiring Diagram on Sheet 3 of 3).~~

E. Remove existing pedestal pole, all attached signal equipment and foundation. Cap and abandon existing conduit. Backfill as necessary.

F. Install 3" polyvinyl chloride electrical conduit (Schedule 80) (trenched).

G. Use existing NEMA size "6" base-mounted cabinet and controller. (Note: Montgomery County Forces shall install 2-wire Control Unit in cabinet).

H. Install handhole.

J. Install 2" polyvinyl chloride electrical conduit (Schedule 80) (trenched).

1 K. ~~Install 4" polyvinyl chloride electrical conduit (Schedule 80) (slotted).~~ Existing overhead electrical service to be maintained by PEPCO.

L. Install 4" polyvinyl chloride electrical conduit (Schedule 80) (trenched).

M. Remove existing handhole. Cap and abandon existing handhole. Existing overhead electrical service to be maintained by PEPCO.

N. Install sidewalk ramp (See Sheet 2 of 3).

O. Install median cut thru (See Sheet 2 of 3).

P. Use existing handhole.

Q. Use existing conduit.

R. Remove existing pavement marking stopline and install 24" white, heat applied permanent preformed thermoplastic pavement marking (stopline) in same location.

S. Remove existing pavement marking crosswalk and install 12" white, heat applied permanent preformed thermoplastic pavement marking (crosswalk) in same location.

T. Install 12" white, heat applied permanent preformed thermoplastic pavement marking (crosswalk).

U. Remove existing pavement marking (stopline or crosswalk).

V. Install 24" white, heat applied permanent preformed thermoplastic pavement marking (stopline).

W. Relocate existing ground mounted sign as shown.

X. Maintain existing interconnect splice cabinet.

Y. Remove existing signal head and install LED signal head in same location (Note: See Wiring Diagram on General Information Sheet).

Z. Install LED signal head as shown.

1 aa. Use existing handhole, adjust to grade of slope as needed.

GENERAL NOTES:

1. All underground utilities shown on these plans are schematic only and may not be complete. The contractor shall be responsible for notifying "MISS UTILITY" prior to construction so that all utilities may be located in the field. If the contractor perceives that a conflict between the utilities and the traffic signal will occur, the contractor shall notify the project engineer immediately so that the conflict may be resolved.
2. All Traffic Signal Foundations shall be installed at the Final Sidewalk or Curb grade for closed sections. Highest Roadway Profile Grade for open sections, to meet clearances as specified in MD 816.03, MD 818.01, MD 818.02, and MD 818.04 The contractor shall verify ultimate grades prior to the installation of all signal equipment.
3. All pavement markings detailed are proposed and are to be installed in accordance with SHA standards. All crosswalks shall be centered on handicap ramps or median cut throughs unless otherwise noted.
4. Pushbuttons are to be located so that they can be activated by a person in a wheelchair from a 60"x 60" level landing area. A level landing area is an area with a cross slope of less than or equal to 2%.
5. If the location of Accessible Pedestrian Signal Pushbuttons must be changed the contractor shall notify the Project Engineer to get approval for new location to ensure proper requirements of the MUTCD are still met. All work must be halted until the Project Engineer has obtained an approved location or if necessary a design waiver is obtained.
6. Pushbutton is to be located so that a pedestrian in a wheelchair located on the level landing area, does not have to reach more than 18".
7. The 10' separation between pushbuttons is to be measured from face of pushbutton, not center to center of pole.
8. Pushbutton arrows are to be parallel to the crossing for which they are intended.
9. The contractor shall remove all unused wiring.

1 Redline Revision
Dated October 3, 2011

SHA MDOT - SHA O.O.T.S.
S.H.A. Approval — Date
T.S. # 40E T.I.M.S. # K439

GEOMETRIC LEGEND
PROPOSED
EXISTING

LEGEND OF UNDERGROUND AND OVERHEAD UTILITIES
AERIAL CABLE —A—A—
ELECTRIC —E—E—
TELEPHONE —T—T—
GAS —G—G—
SEWER —S—S—
WATER —W—W—
CABLE TV —TV—TV—

STREET TRAFFIC STUDIES, LTD.
400 Crain Hwy.NW.
Glen Burnie,MD 21061
Ph (410) 590-5500
Fax (410) 590-6637
5961.dgn

APPROVALS	REVISIONS
TEAM LEADER	E 9-29-11 ADD APS/CPS, ADA RAMPS TIMS No. K439 SHA No. XX6555185
ASST. DIV. CHIEF	RRZ
DIVISION CHIEF	D December, 2002 Reconstruct due to new geometrics TIMS No. E148 SHA No. M08655177
OFFICE DIRECTOR	

ORIGINAL ON FILE

PLOTTED: $DATETIME$
FILE: $FILE$

SHA STATE OF MARYLAND DEPARTMENT OF TRANSPORTATION STATE HIGHWAY ADMINISTRATION

MD 188 (WILSON LANE) AND WHITTIER BLVD

BETHESDA, MARYLAND

TRAFFIC SIGNAL PLAN

SCALE 1"= 20' DATE _____ CONTRACT NO. _____

DESIGNED BY _____ COUNTY MONTGOMERY
DRAWN BY _____ LOGMILE 15018801.56
CHECKED BY _____ TIMS NO. _____
F.A.P. NO. _____ TOD NO. _____

TS NO. 40E | DRAWING NO. 1 OF 3 | SHEET NO. OF

USER: $USER$ 10/12/2011 1:42:36 PM