F H W A REGION NO.	STATE	FED. AID PROJ. NO.	SHEET NO.	TOTAL SHEETS
3	MD.			

SIGNING SCHEDULE

(20,21,25,26) LEFT TURN YIELD ON GREEN — R10-12, 36" X 42"

(40),42 — R4-7, 24" X 30"

(30,33) ONLY — R3-5, 30" X 36"

39,(41) DO NOT BLOCK INTERSECTION — R10-7, 24" X 30"

35,36,37,38 PUSH BUTTON FOR WALK SIGNAL — R10-4, 9" X 12"

43 SOUTH — M3-2, 24" X 12"

MARYLAND 185 — M1-5, 21" X 15"

(19,22,24,27) MANOR RD. — D3-2, VAR. X 16"

(29,31,32,34) CONNECTICUT AVE. — D3-2, VAR. X 16"

(23) TO JONES BRIDGE ROAD

M6-2, 21" X 15"

28 TO JONES BRIDGE ROAD

NOTES:

1. PROPOSED SIGNS TO BE INSTALLED: (19,22,24,27), (20,21,25,26), (29,31,32,34),(23), (30,33), (40), AND (41).
2. ALL OTHER SIGNS SHOWN ABOVE ARE EXISTING AND SHALL REMAIN.
3. USE SPECIAL PROVISIONS FOR SIGNS TO BE REMOVED.

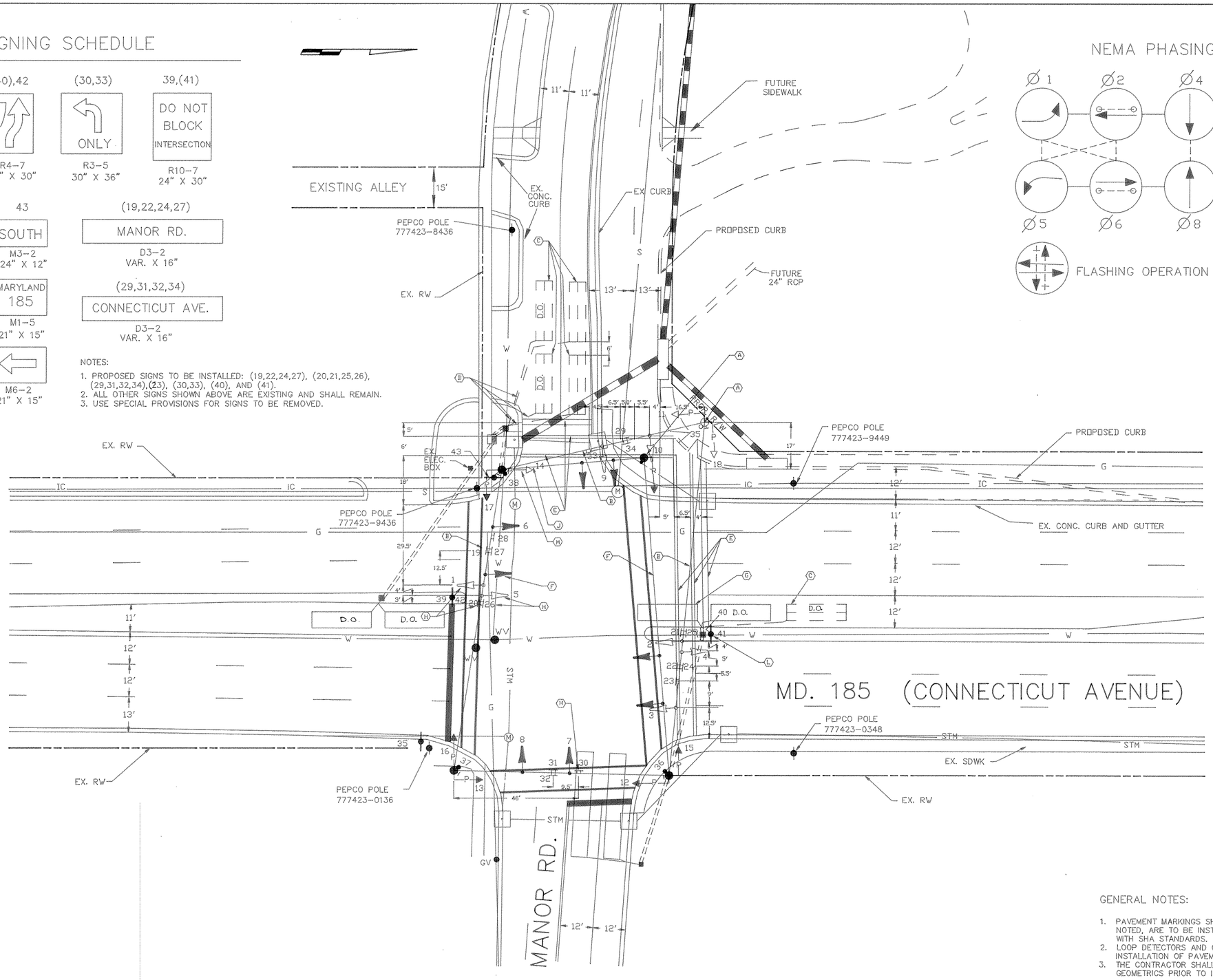

NEMA PHASING

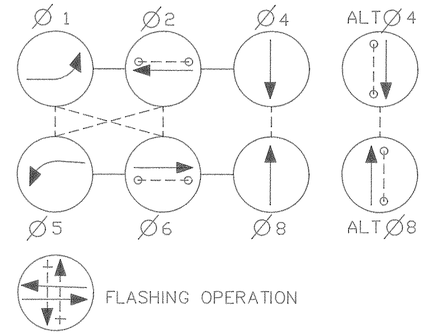

PHASING NOTES:

1. PHASES ASSOCIATED BY A SOLID LINE WILL NOT OPERATE CONCURRENTLY.
2. PHASES ASSOCIATED BY A DASHED LINE WILL OPERATE CONCURRENTLY.

SIGNALS

EXISTING

12,13,15-17 — 12"

6-8 — R Y G — 12"

PROPOSED

11,14,18 — 12"

2,5 — R Y Y G G — 12"

3,9,10 — R Y G — 12"

1,4 — R 8" Y 8" G 8" — 12" 12"

NOTE: EXISTING SIGNALS SHOWN ABOVE WILL REMAIN. ALL OTHER EXISTING SIGNALS WILL BE REMOVED.

GENERAL NOTES:

1. PAVEMENT MARKINGS SHOWN ARE PROPOSED, AND UNLESS OTHERWISE NOTED, ARE TO BE INSTALLED BY CONTRACTORS IN ACCORDANCE WITH SHA STANDARDS.
2. LOOP DETECTORS AND CONDUIT SHALL BE INSTALLED PRIOR TO THE INSTALLATION OF PAVEMENT MARKINGS.
3. THE CONTRACTOR SHALL CONFIRM THE LOCATION OF ALL PROPOSED GEOMETRICS PRIOR TO INSTALLATION OF SIGNAL EQUIPMENT.

LEGEND OF UNDERGROUND UTILITIES

—G—G—	GAS MAIN
—W—W—	WATER MAIN
—S—S—	SEWER MAIN
—E—E—	ELECTRIC CABLES
—T—T—	TELEPHONE CABLES
—C—C—	CABLE TELEVISION
—A—A—	AERIAL CABLES

Barton-Aschman Associates, Inc. of Virginia
10300 EATON PLACE, SUITE 250 FAIRFAX, VA. 22030
(703) 359-7290 FAX (703) 591-2058

REVISIONS

JUNE 27, 1990. MODIFICATION FOR MANOR RD. WIDENING

APPROVALS

ORIGINALS ON FILE

CHIEF SIGNAL DESIGN SECTION

DISTRICT TRAFFIC ENGINEER

CHIEF-BUREAU OF TRAFFIC ENGINEERING

DEPUTY CHIEF ENGINEER OFFICE OF TRAFFFIC

MARYLAND DEPARTMENT OF TRANSPORTATION
STATE HIGHWAY ADMINISTRATION – OFFICE OF TRAFFIC
TRAFFIC ENGINEERING DIVISION

DRAWN BY: J Y ASHCRAFT
DES. BY: R J MILSTEAD
CHK. BY:

MD 185 (CONNECTICUT AVE.) AND MANOR RD.

COUNTY: MONTGOMERY

DATE: UNKNOWN
SCALE: 1"=20'
F.A.P. NO.
S.H.A. NO. BW-339-802-312

TS/FILE NO. 2648

SHEET NO. 2 OF 6

15018501.95