DRILL HOLES

BORDER REV: DATE: June 1, 2004

INSIDE WALL OF FIREHOUSE

NOT TO SCALE

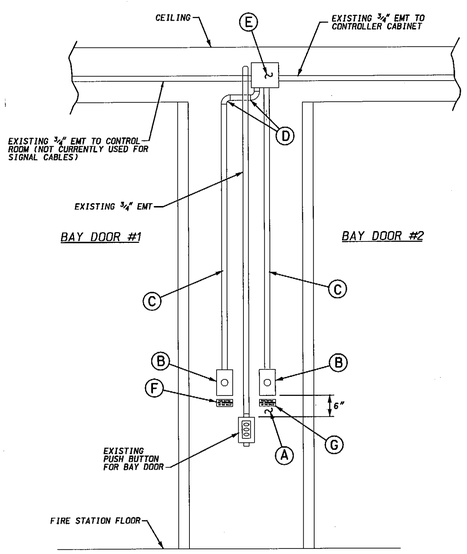

CONSTRUCTION DETAILS

A. Disconnect existing wiring and pull back Junction box. Remove existing pushbutton assembly and ½" EMT to junction box.

B. Install pushbutton 6" above existing pushbutton for bay door.

C. Install ½" EMT between pushbutton and junction box.

D. Install ½" EMT and bends into junction box as shown.

E. Use existing 5-conductor cable in junction box. Use 2-conductor cables that are presently in use and re-route them into proposed pushbutton on left for NB MD 185 calls. Splice proposed 2-conductor cable into 2 spare conductors and route to proposed pushbutton on right for SB MD 185 calls.

F. Install 2"x 3" plate that reads "PUSH BUTTON FOR NORTHBOUND MD 185 CALLS".

G. Install 2"x 3" plate that reads "PUSH BUTTON FOR SOUTHBOUND MD 185 CALLS".

BLOW-UP OF DETAIL "F"

PUSH BUTTON
FOR NORTHBOUND
MD 185 CALLS

BLOW-UP OF DETAIL "G"

PUSH BUTTON
FOR SOUTHBOUND
MD 185 CALLS

PHASE CHART

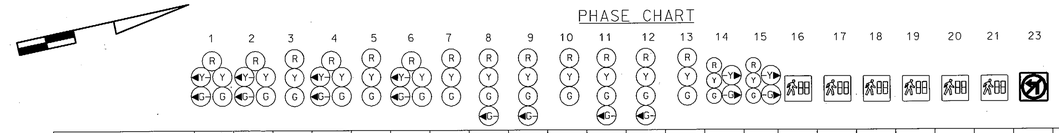

	1	2	3	4	5	6	7	8	9	10	11	12	13	14	15	16	17	18	19	20	21	23
PHASE 1 & 5	◄G-/R	◄G-/R	R	◄G-/R	R	◄G-/R	R	R	R	R	R	R	R	R	R	DW	DW	DW	DW	DW	DW	OFF
CHANGES TO PHASES 1 & 6, 2 & 5 OR 2 & 6																						
PHASE 1 & 6	◄G-/G	◄G-/G	G	R	R	R	R	R	R	R	R	R	R	R	R	DW	WK	WK	DW	DW	DW	OFF
1 & 6 CHANGE	◄Y-/G	◄Y-/G	G	R	R	R	R	R	R	R	R	R	R	R	R	DW	WK	WK	DW	DW	DW	OFF
PHASE 2 & 5	R	R	R	◄G-/G	G	◄G-/G	G	R	R	R	R	R	R	R	R	WK	DW	DW	WK	DW	DW	OFF
2 & 5 CHANGE	R	R	R	◄Y-/G	G	◄Y-/G	G	R	R	R	R	R	R	R	R	WK	DW	DW	WK	DW	DW	OFF
PHASE 2 & 6	G	G	G	G	G	G	G	R	R	R	R	R	R	R	R	WK	WK	WK	WK	DW	DW	OFF
PED CLEAR	G	G	G	G	G	G	G	R	R	R	R	R	R	R	R	FL/DW	FL/DW	FL/DW	FL/DW	DW	DW	OFF
2 & 6 CHANGE	Y	Y	Y	Y	Y	Y	Y	R	R	R	R	R	R	R	R	DW	DW	DW	DW	DW	DW	OFF
PHASE 3	R	R	R	R	R	R	R	R	R	R	G ◄G-	G ◄G-	G	R	R	DW	DW	DW	DW	DW	DW	OFF
3 CHANGE	R	R	R	R	R	R	R	R	R	R	Y	Y	Y	R	R	DW	DW	DW	DW	DW	DW	OFF
PHASE 4	R	R	R	R	R	R	R	G ◄G-	G ◄G-	G	R	R	R	R	R	DW	DW	DW	DW	DW	DW	OFF
4 CHANGE	R	R	R	R	R	R	R	Y	Y	Y	R	R	R	R	R	DW	DW	DW	DW	DW	DW	OFF
PHASE 3 ALT	R	R	R	R	R	R	R	R	R	R	G ◄G-	G ◄G-	G	R	R	DW	DW	DW	DW	WK	WK	OFF
PED CLEAR	R	R	R	R	R	R	R	R	R	R	G ◄G-	G ◄G-	G	R	R	DW	DW	DW	DW	FL/DW	FL/DW	OFF
3 ALT CHANGE	R	R	R	R	R	R	R	R	R	R	Y	Y	Y	R	R	DW	DW	DW	DW	DW	DW	OFF
PRE EMPT 1	R	R	R	R	R	R	R	R	R	R	R	R	R	G	G	DW	DW	DW	DW	DW	DW	ON
PRE EMPT 1 CHANGE	R	R	R	R	R	R	R	R	R	R	R	R	R	Y	Y	DW	DW	DW	DW	DW	DW	ON
PRE EMPT 2	G	G	G	R	R	R	R	R	R	R	R	R	R	R/-G►	R/-G►	DW	DW	DW	DW	DW	DW	ON
PRE EMPT 2 CHANGE	Y	Y	Y	R	R	R	R	R	R	R	R	R	R	R/-Y►	R/-Y►	DW	DW	DW	DW	DW	DW	ON
FLASHING OPERATION	FL/Y	FL/Y	FL/Y	FL/Y	FL/Y	FL/Y	FL/Y	FL/R	FL/R	FL/R	FL/R	FL/R	FL/R	FL/R	FL/R	DARK	DARK	DARK	DARK	DARK	DARK	DARK

NOTE: SIGN #23 IS A FIBER OPTIC L3-1 SIGN

WIRING DIAGRAM

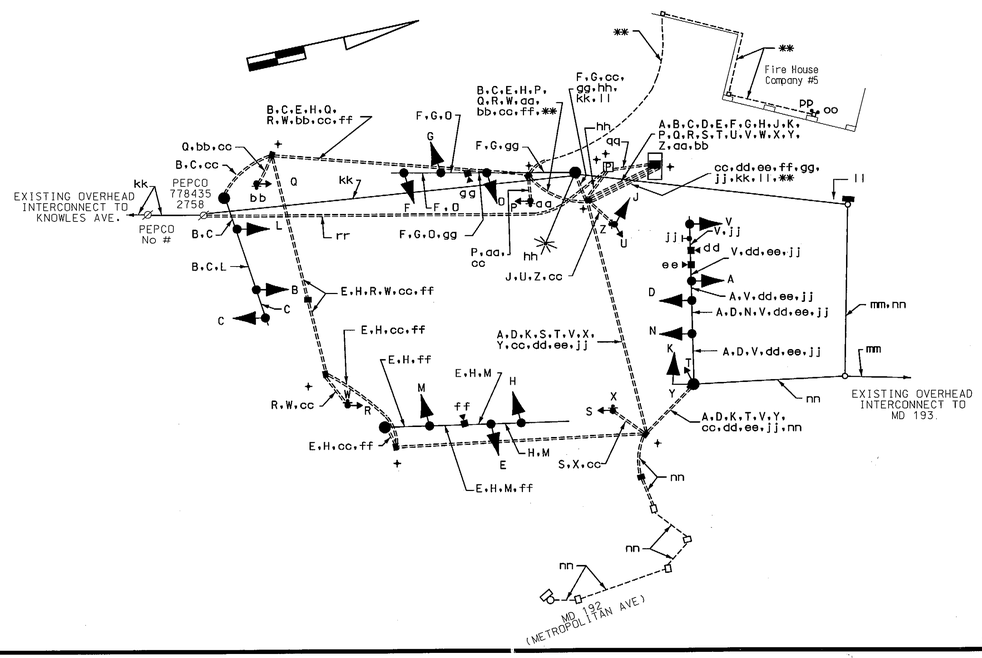

WIRING KEY

A B C D E F G H J K } 7-CONDUCTOR ELECTRICAL CABLE (NO. 14 A.W.G)

L M N O P Q R S T U V } 5-CONDUCTOR ELECTRICAL CABLE (NO. 14 A.W.G)

W X Y Z aa bb } 2-CONDUCTOR ELECTRICAL CABLE (NO. 14 A.W.G)

cc - STRANDED BARE COPPER GROUND WIRE (NO. 6 A.W.G.)

dd ee ff gg } CONTROL CABLE (CAMERA TO CONTROLLER)

hh - 2-CONDUCTOR TRAY CABLE (NO. 12 A.W.G)

jj - 3-CONDUCTOR ELECTRICAL CABLE (NO. 14 A.W.G)

kk - EXISTING 12-PAIR VOICE GRADE INTERCONNECT CABLE (OVERHEAD)

ll - 12-PAIR VOICE GRADE INTERCONNECT CABLE (SELF SUPPORTING)

mm - EXISTING 50-PAIR INTERCONNECT CABLE

nn - 12-PAIR VOICE GRADE INTERCONNECT CABLE (JELLY FILLED)

oo pp } 2-CONDUCTOR ELECTRICAL CABLE (NO. 14 A.W.G) FOR FIREHOUSE PUSHBUTTON

qq - 3-1 CONDUCTOR ELECTRICAL CABLE (NO. 8 A.W.G.) THHN/THWN

rr - 3-1 CONDUCTOR ELECTRICAL CABLE (NO. 2 A.W.G.) THHN

** - USE EXISTING CABLE FOR PUSHBUTTONS

+ - GROUND ROD

TOD NO: XY132-04
SHA NO: MO458B52
MD 185 @ Plyers Mill Road

STATE OF MARYLAND
DEPARTMENT OF TRANSPORTATION
STATE HIGHWAY ADMINISTRATION

MD 185 (CONNECTICUT AVE.) AND MD 192 / PLYERS MILL RD

KENSINGTON, MARYLAND

GENERAL INFORMATION SHEET

SCALE NONE DATE 7/18/12 CONTRACT NO. XY1325185

DESIGNED BY R.R.Z.
DRAWN BY R.C.
CHECKED BY M. RL
F.A.P. NO.

COUNTY MONTGOMERY
LOGMILE 15018504.40
TIMS NO. K630
TOD NO.

TS NO. 4445C | DRAWING NO. 4 OF 5 | SHEET NO. OF

STREET TRAFFIC STUDIES, LTD.
400 Crain Hwy. NW.
Glen Burnie, MD 21061
Ph (410) 590-5500
Fax (410) 590-6637

6072GI.DGN

PLOTTED: $DATETIME$
FILE: $FILE$

DRILL HOLES

DRILL HOLES

MP 98 8:33:27 7/20/2012 udgr 18:(6072GI.DGN)