DRILL HOLES

BORDER REV. DATE: June 1, 2004

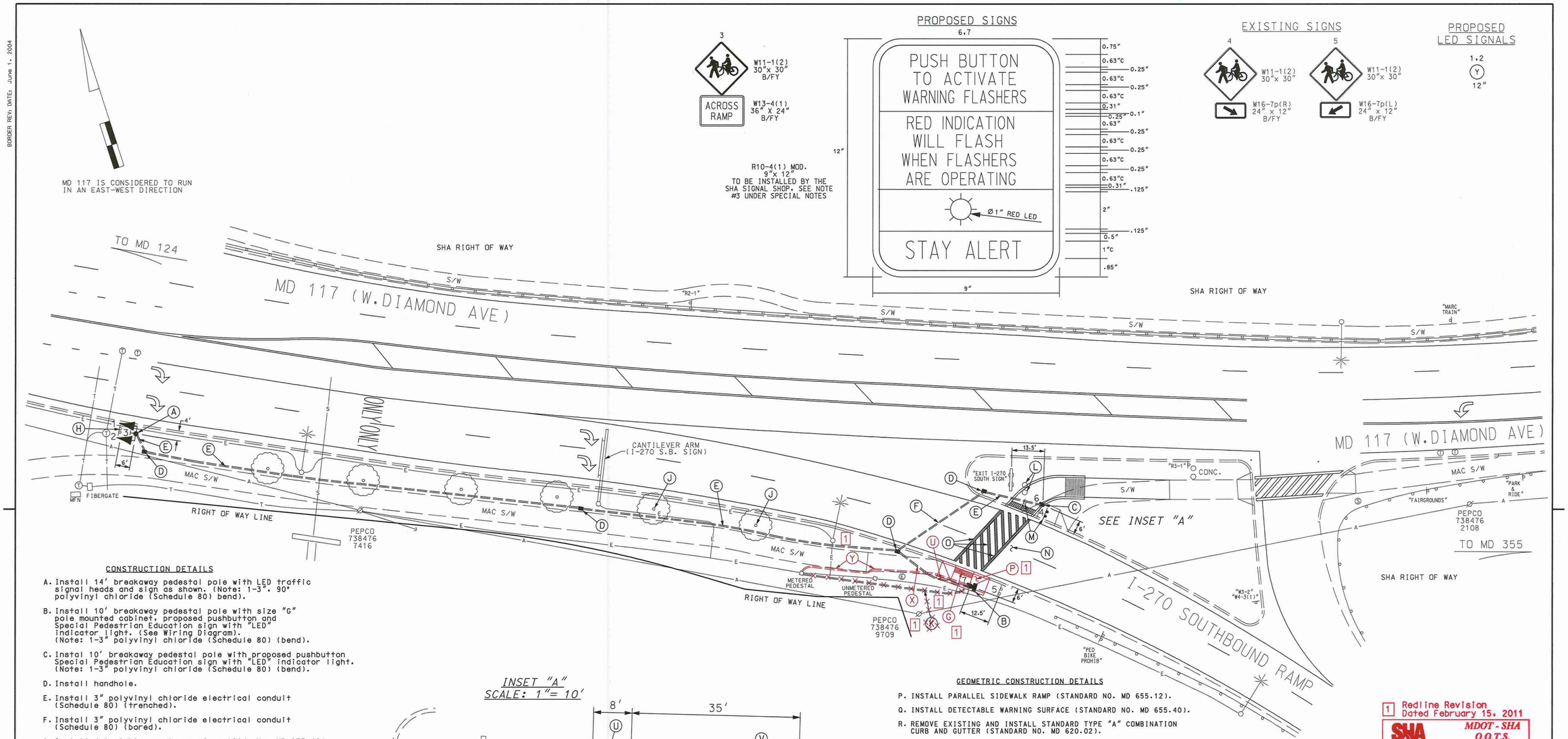

PROPOSED SIGNS

EXISTING SIGNS

PROPOSED LED SIGNALS

CONSTRUCTION DETAILS

A. Install 14' breakaway pedestal pole with LED traffic signal heads and sign as shown. (Note: 1-3", 90° polyvinyl chloride (Schedule 80) bend).

B. Install 10' breakaway pedestal pole with size "G" pole mounted cabinet, proposed pushbutton and Special Pedestrian Education sign with "LED" indicator light. (See Wiring Diagram). (Note: 1-3" polyvinyl chloride (Schedule 80) (bend).

C. Instal 10' breakaway pedestal pole with proposed pushbutton Special Pedestrian Education sign with "LED" indicator light. (Note: 1-3" polyvinyl chloride (Schedule 80) (bend).

D. Install handhole.

E. Install 3" polyvinyl chloride electrical conduit (Schedule 80) (trenched).

F. Install 3" polyvinyl chloride electrical conduit (Schedule 80) (bored).

G. Install detectable warning surface (Std. No. MD 655.40) onto existing ADA ramp.

H. Remove existing ground mounted W11-1(2) and W13-4(1) signs and post.

J. Existing street trees to be removed by District Forces.

1 ~~K. Install 3" polyvinyl chloride electrical conduit (Schedule 80) (trenched) (for power service). Use existng metered pedestal.~~

L. Remove existing concrete foundation.

M. Relocate existing W11-1(2) sign and posts 10' east as shown.

N. Remove existing crosswalk pavement markings.

O. Install 12" white heat applied permanent preformed thermoplastic pavement marking (crosswalk).

INSET "A"
SCALE: 1"= 10'

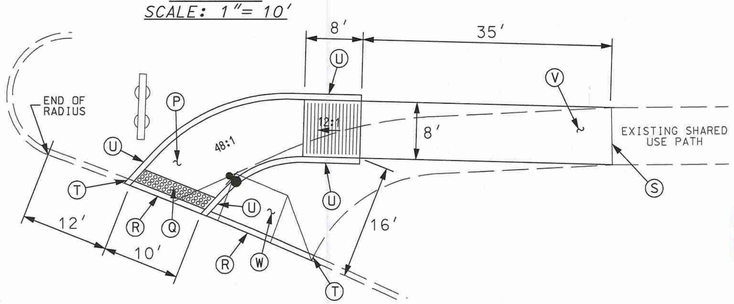

GEOMETRIC CONSTRUCTION DETAILS

P. INSTALL PARALLEL SIDEWALK RAMP (STANDARD NO. MD 655.12).

Q. INSTALL DETECTABLE WARNING SURFACE (STANDARD NO. MD 655.40).

R. REMOVE EXISTING AND INSTALL STANDARD TYPE "A" COMBINATION CURB AND GUTTER (STANDARD NO. MD 620.02).

S. TIE IN RAMP WITH EXISTING SIDEWALK AT JOINT.

T. TIE NEW CURB TO EXISTING CURB AT JOINT.

U. INSTALL STANDARD TYPE "A" CURB.

V. REMOVE EXISTING SIDEWALK AND INSTALL 8' SIDEWALK (48:1) AS SHOWN.

W. REMOVE EXISTING RAMP AND SIDEWALK. BACKFILL, MULCH AND SEED AS NECESSARY.

1 X. Remove existing sidewalk and install 3" polyvinyl chloride electrical conduit and (Schedule 80) (trenched).

1 Y. Remove existing necessary sidewalk to install 3" polyvinyl chloride electrical conduit (Schedule 80) (trenched) (for power service). Use existng metered pedestal.

1 Redline Revision Dated February 15, 2011

SHA MDOT - SHA O.O.T.S.
S.H.A. Approval Date
T.S. # 4774 T.I.M.S. # J803

GEOMETRIC LEGEND	
PROPOSED	
EXISTING	

LEGEND OF UNDERGROUND AND OVERHEAD UTILITIES	
AERIAL CABLE	A
ELECTRIC	E
TELEPHONE	T
GAS	G
SEWER	S
WATER	W
CABLE TV	TV

STREET TRAFFIC STUDIES, LTD.
400 Crain Hwy. NW.
Glen Burnie, MD 21061
Ph (410) 590-5500
Fax (410) 590-6637

5900.dgn T-75

APPROVALS	REVISIONS
TEAM LEADER	
ASST. DIV. CHIEF	
DIVISION CHIEF	
OFFICE DIRECTOR	

STATE OF MARYLAND
DEPARTMENT OF TRANSPORTATION
STATE HIGHWAY ADMINISTRATION

MD 117 (W.DIAMOND AVE) AND I-270 SOUTHBOUND RAMP

GAITHERSBURG, MARYLAND

HAZARD IDENTIFICATION BEACON

SCALE 1"= 20' DATE 10-25-2010 CONTRACT NO. XX3545168R

DESIGNED BY R R ZACHERL COUNTY MONTGOMERY
DRAWN BY W J NIES LOGMILE 15011711.58
CHECKED BY TIMS NO. J803
F.A.P. NO. TOD NO.

TS NO. 4774 | DRAWING NO. 1 OF 2 | SHEET NO. OF

PLOTTED: WEDNESDAY, FEBRUARY 16, 2011 AT 02:37 PM
FILE: C:\DOCUMENTS AND SETTINGS\BTHOMPSON\LOCAL SETTINGS\TEMPORARY INTERNET FILES\OLKC8\5900 (2).DGN