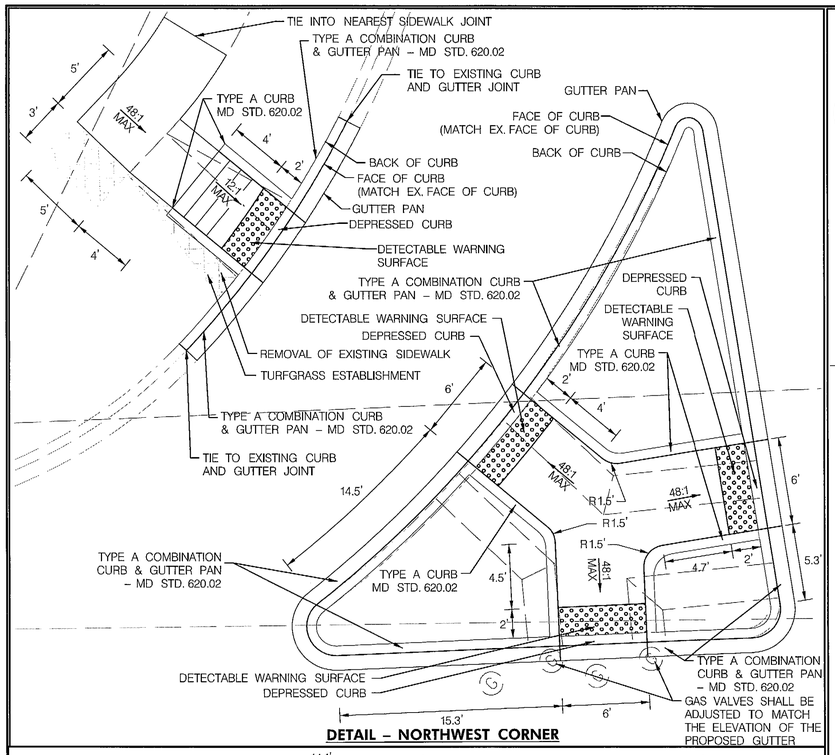


**DETAIL – NORTHWEST CORNER**

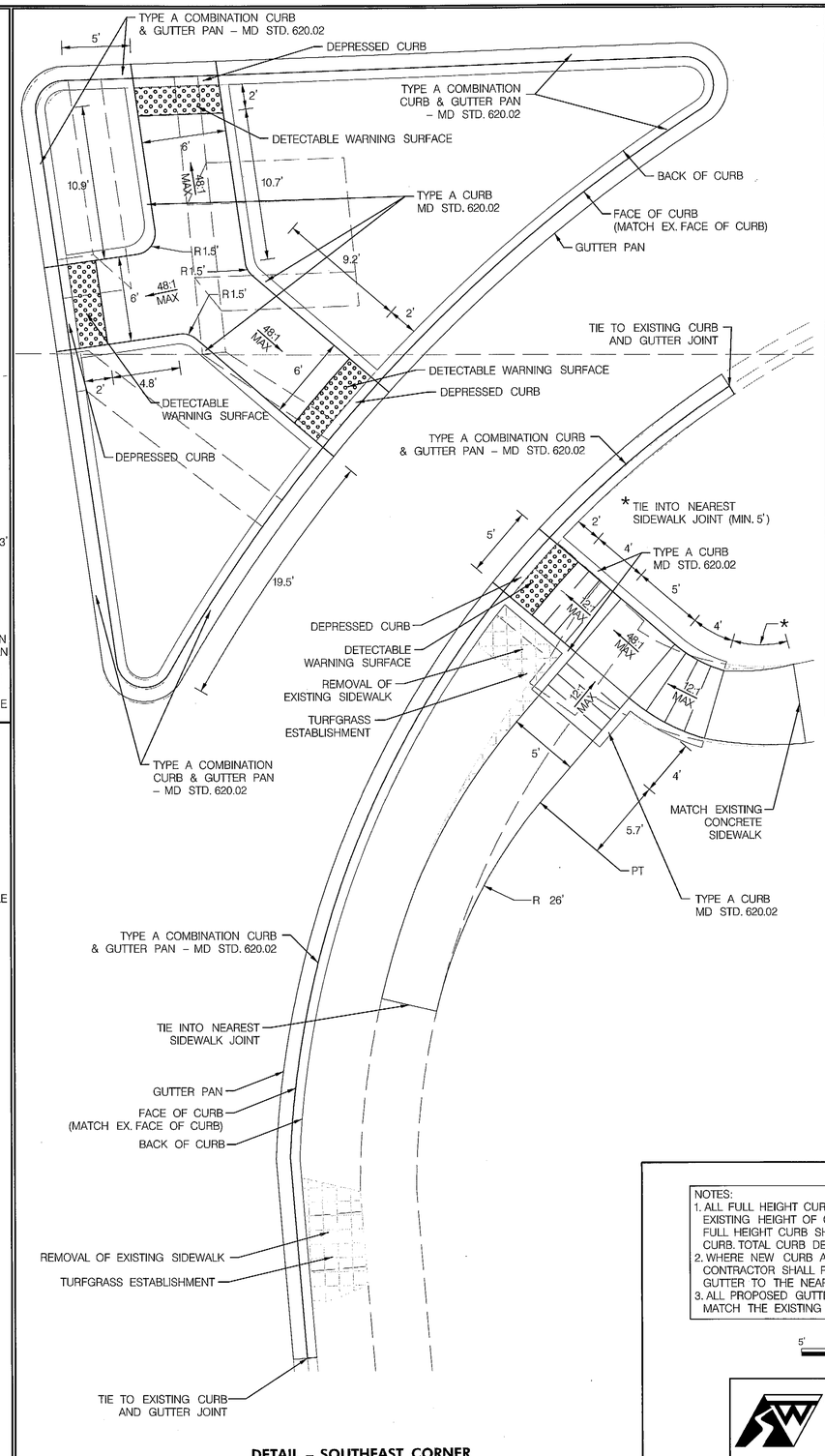


**DETAIL – SOUTHEAST CORNER**

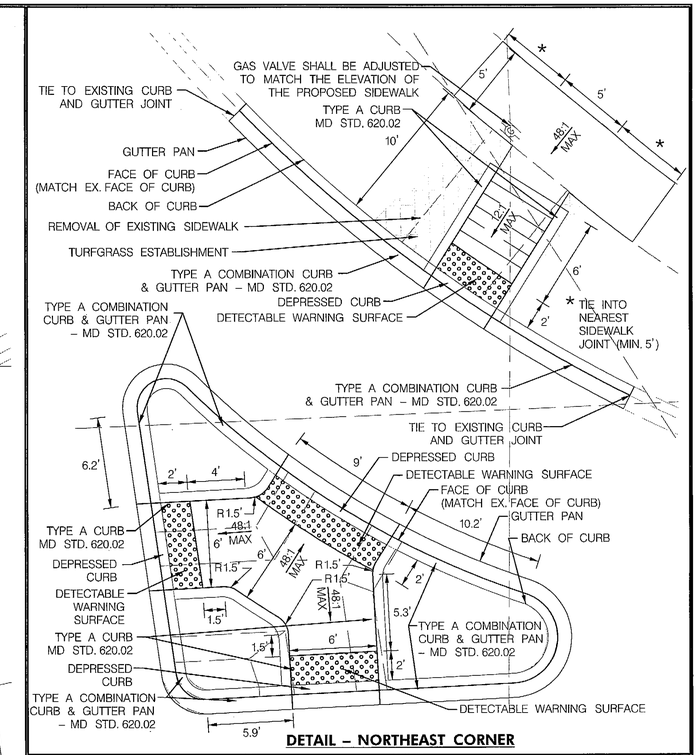


**DETAIL – NORTHEAST CORNER**

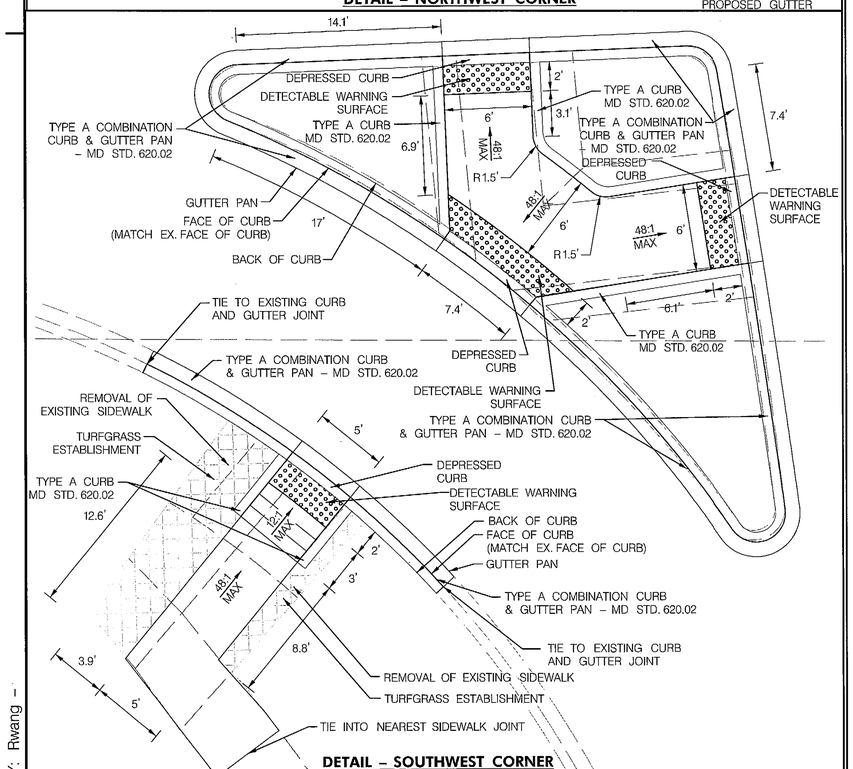


**DETAIL – SOUTHWEST CORNER**

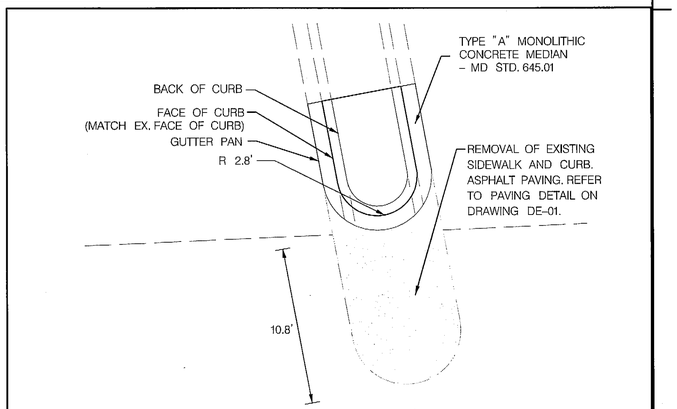


**MEDIAN DETAIL – NORTH LEG**

NOTES:
1. ALL FULL HEIGHT CURB AND GUTTER SHALL MATCH EXISTING HEIGHT OF CURB. GUTTER DEPTH SHALL BE 8". FULL HEIGHT CURB SHALL MATCH EXISTING HEIGHT OF CURB. TOTAL CURB DEPTH SHALL BE 16".
2. WHERE NEW CURB AND GUTTER IS PROPOSED, THE CONTRACTOR SHALL REPLACE THE ADJACENT CURB GUTTER TO THE NEAREST EXISTING CURB JOINT.
3. ALL PROPOSED GUTTERS SHALL BE CONSTRUCTED TO MATCH THE EXISTING PAVEMENT ELEVATION.

5' 0 5' 10'
SCALE: 1" = 5'

SABRA, WANG & ASSOCIATES, INC.
7055 SAMUEL MORSE DRIVE
SUITE 100
COLUMBIA, MD 21046
(443) 741-3500
WWW.SABRA-WANG.COM

SHA
STATE OF MARYLAND
DEPARTMENT OF TRANSPORTATION
STATE HIGHWAY ADMINISTRATION
OFFICE OF TRAFFIC & SAFETY
TRAFFIC ENGINEERING DESIGN DIVISION

MD 115 (MUNCASTER MILL ROAD)/SNOUFFER SCHOOL ROAD AT
MD 124 (WOODFIELD ROAD)
GAITHERSBURG, MARYLAND

# RAMP DETAILS

SCALE 1" = 5' ADVERTISED DATE AUGUST 2013 CONTRACT NO. XY2385185

| | | | |
|---|---|---|---|
| DESIGNED BY | R. WANG | COUNTY | MONTGOMERY |
| DRAWN BY | R. WANG | LOGMILE | 15011500.00 |
| CHECKED BY | A. GRIFFIN | TIMS NO. | M055 |
| F.A.P. NO. | SEE TITLE SHEET | TOD NO. | |

TS NO. 249 (D) | DRAWING SG-04 OF 04 | SHEET NO. 4 OF 4

PLOTTED: Thursday, August 22, 2013 AT 02:42 PM
FILE: R:\2008\73 SHA BCS 2008-05A_TEDD DESIGN_STV_JV__$SM\Task 240 Montgomery County APS-CPS\dgn\MD 115 at MD 124\pHD-P001_MD115-MD124.dgn

BY: Rwang –