PROJECT DESCRIPTION

GENERAL

THIS PORTION OF THE PROJECT INVOLVES THE REPLACEMENT OF A LOOP DETECTOR FOR THE SOUTHBOUND APPROACH AT THE INTERSECTION OF MD 97 (GEORGIA AVENUE) AND SHOREFIELD ROAD IN MONTGOMERY COUNTY, DUE TO THE RESURFACING AND SAFETY IMPROVEMENTS TO MD 97. ALL EXISTING VEHICULAR TRAFFIC SIGNAL HEADS AND PEDESTRIAN SIGNAL HEADS WILL REMAIN. MD 97 IS ASSUMED TO RUN IN A NORTH-SOUTH DIRECTION.

INTERSECTION OPERATION

THE INTERSECTION WILL CONTINUE TO OPERATE IN A NEMA FIVE-PHASE, FULL-TRAFFIC-ACTUATED MODE WITH EXCLUSIVE/PERMISSIVE LEFT TURN PHASING FOR THE SOUTHBOUND APPROACH. THE CONCURRENT MAINLINE AND ALTERNATE SIDE STREET PEDESTRIAN PHASES WILL REMAIN.

CONTROLLER REQUIREMENTS

THE EXISTING BASE MOUNTED CONTROLLER SHALL REMAIN.

THE CONTACT PERSONS FOR DISTRICT #3 ARE AS FOLLOWS:

Mr. Jeff Wentz
Assistant District Engineer - Traffic
Phone: 301-513-7358

Mr. Augie Rebish
Assistant District Engineer - Utility
Phone: 301-513-7350

Mr. Wayne Mowdy
Assistant District Engineer - Maintenance
Phone: 301-513-7304

Mr. Richard L. Daff Sr.
Chief, Traffic Operations Division
Phone: 410-787-7630

The Power Company Representative is:
Potomac Electric Power Company
8300 Old Marlboro Pike
Upper Marlboro, Maryland 20772
Phone: 301-961-5325

Mr. Kamal Hamud
Montgomery County Department of Public Works
Phone: 240-777-8761

Mr. Keith Lord
Montgomery County
Phone: 301-279-1291

EQUIPMENT LIST 'A'

EQUIPMENT TO BE FURNISHED BY THE SHA.

ITEM NO	QUANTITY	DESCRIPTION
NONE		

EQUIPMENT LIST 'C'

EQUIPMENT TO BE REMOVED AND RETURNED TO SHA.

ITEM NO	QUANTITY	DESCRIPTION
NONE - ALL REMOVED EQUIPMENT SHALL BECOME THE PROPERTY OF THE CONTRACTOR		

EQUIPMENT LIST 'B'

EQUIPMENT TO BE FURNISHED AND INSTALLED BY THE CONTRACTOR.

ITEM NO	QUANTITY	DESCRIPTION
585412	300 LF	12 INCH WHITE LEAD FREE REFLECTIVE THERMOPLASTIC PAVEMENT MARKINGS
585424	100 LF	24 INCH WHITE LEAD FREE REFLECTIVE THERMOPLASTIC PAVEMENT MARKINGS
800000	1 LS	REMOVE AND DISPOSE OF TRAFFIC SIGNAL EQUIPMENT
805160	10 LF	1 INCH LIQUID TIGHT FLEXIBLE NON-METALLIC CONDUIT FOR DETECTOR SLEEVE
862101	450 LF	LOOP WIRE ENCASED IN FLEXIBLE TUBING (NO. 14 AWG)
862102	180 LF	SAW CUT FOR SIGNAL (LOOP DETECTOR)

WIRING DIAGRAM

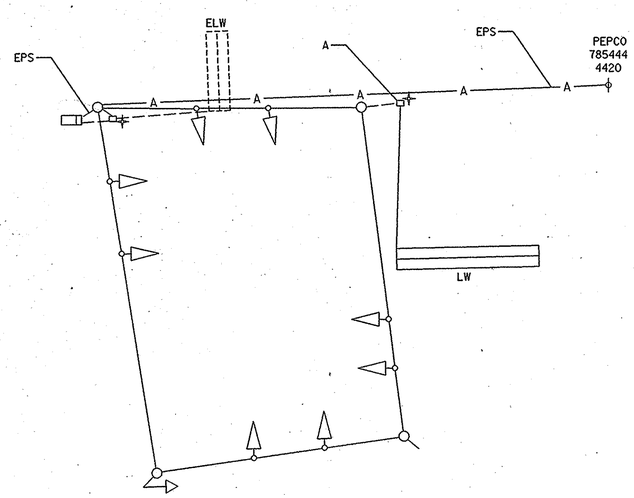

A — SPLICE NEW LOOP WIRE TO ONE EXISTING 2 CONDUCTOR (ALUMINUM SHIELDED) WIRE

LW — LOOP WIRE

ELW — EXISTING LOOP WIRE

EPS — EXISTING POWER SOURCE

EXISTING GROUND ROD - 3/4 INCH DIAMETER X 10 FOOT LENGTH.

PHASE CHART

	1	2	3	4	5	6	7	8	9	10	11	12
PHASE 2 & 5	R	R	G	G	R	R	R	R	DW	DW	DW	DW
PHASE 5 CHANGE	R	R	G	G	R	R	R	R	DW	DW	DW	DW
PHASE 2 & 6	G	G	G	G	R	R	R	R	W	W	DW	DW
PHASE 2 & 6 PED. CLEARANCE	G	G	G	G	R	R	R	R	FL/DW	FL/DW	DW	DW
PHASE 2 & 6 CHANGE	Y	Y	Y	Y	R	R	R	R	DW	DW	DW	DW
PHASE 4 & 8	R	R	R	R	G	G	G	G	DW	DW	DW	DW
PHASE 4 & 8 CHANGE	R	R	R	R	Y	Y	Y	Y	DW	DW	DW	DW
PHASE 4 & 8 ALT.	R	R	R	R	G	G	G	G	DW	DW	W	W
PHASE 4 & 8 ALT. PED. CLEARANCE	R	R	R	R	G	G	G	G	DW	DW	FL/DW	FL/DW
PHASE 4 & 8 ALT. CHANGE	R	R	R	R	Y	Y	Y	Y	DW	DW	DW	DW
FLASHING OPERATION	FL/Y	FL/Y	FL/Y	FL/Y	FL/R	FL/R	FL/R	FL/R	DARK	DARK	DARK	DARK

PROPOSED PAVEMENT MARKING DETAIL

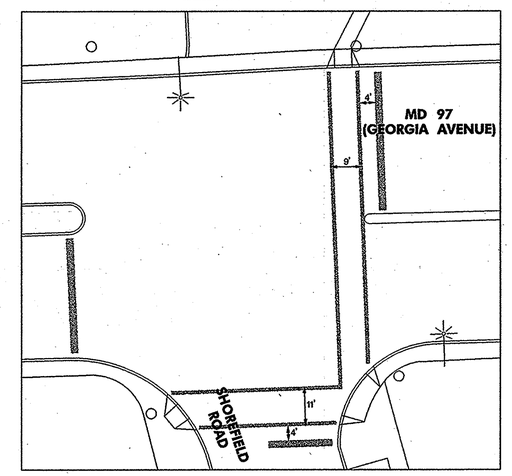

STATE OF MARYLAND
DEPARTMENT OF TRANSPORTATION
STATE HIGHWAY ADMINISTRATION
OFFICE OF TRAFFIC & SAFETY
TRAFFIC ENGINEERING DESIGN DIVISION

MD 97 (GEORGIA AVENUE) AND SHOREFIELD ROAD

GENERAL INFORMATION

SCALE NONE DATE 12/2006 CONTRACT NO. MO5665177

DESIGNED BY MCG COUNTY MONTGOMERY
DRAWN BY MCG LOGMILE 15009703.27
CHECKED BY BAB T.I.M.S. NO. H326
F.A.P. NO. TOD NO.

DRAWING NO. TS-2017C OF SHEET NO. OF

STV Incorporated
engineers / architects / planners / construction managers
7125 Ambassador Road Baltimore, MD 21244-2722 (410) 944-9112

PLOTTED: THURSDAY, DECEMBER 14, 2006 AT 11:23 AM
FILE: I:\PROJECTS\0312513\0312513_0010\DRAWINGS\TRA\TRAFFIC\SHOREFIELD ROAD LOOP ONLY\PSG-P001_SHOREFIELD.DGN

BY: WEAVERCC