MD 97 IS ASSUMED TO RUN IN A NORTH-SOUTH DIRECTION.

## EXISTING SIGNS

9 STOP

10, 11

12 RIGHT LANE MUST TURN RIGHT

13 Emory Church RD 2800

14 Georgia AV 16800

15 REDUCED SPEED AHEAD

16 DO NOT ENTER

## PROPOSED SIGNS

17, 18, 19 STOP — R1-1 36"X36"

20 Emory Church RD 2800 — D-3(1) DUAL FACE (VAR.x16")

21 Emory Church RD < 2800 — D-3(1) DUAL FACE (VAR.x16")

22 GEORGIA AV <16800 NORTH 97 SOUTH MARYLAND — M 95-1 (MOD) 78"x40"

23 GEORGIA AV 16800 SOUTH 97 NORTH MARYLAND — M 95-1 (MOD) 78"x40"

24 — R4-8 (24"x30")

25 — R4-7 (24"x30")

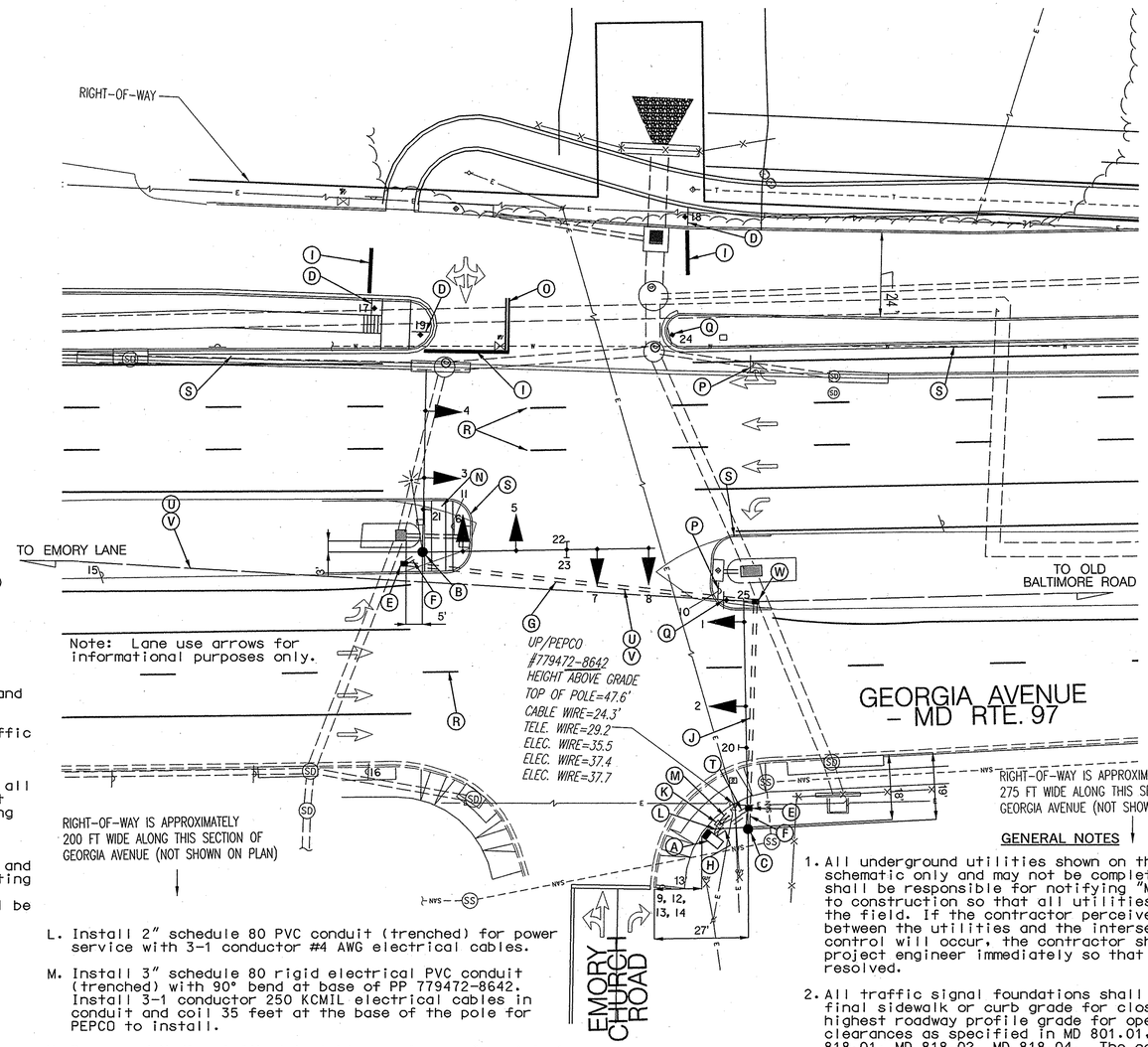


Note: Lane use arrows for informational purposes only.

## PROPOSED SIGNALS

| 1-4 | 5-8 |
|---|---|
| Y | R |
| 12" | 12" |

LED BLACK FACED

## NEMA PHASING

FLASHING OPERATION

0 20 40 80

SCALE IN FEET

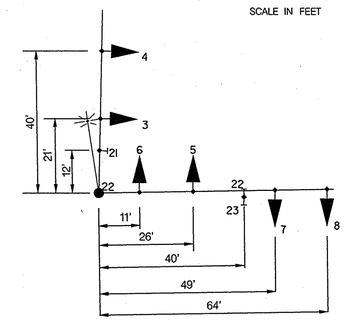


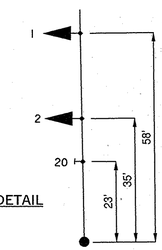


SIGNAL HEAD AND SIGN PLACEMENT DETAIL

## CONSTRUCTION DETAILS

All equipment, materials, work zone safety measures, and workmanship shall comply to Maryland State Highway Administration and Montgomery County Standards and Standard Specifications and the Manual on Uniform Traffic Control Devices.

A. Install new NEMA size "6" ground mounted cabinet and controller and all necessary equipment as shown. Pull all proposed electrical cables into the controller cabinet and properly tag/label each cable. All internal wiring shall be conducted by Montgomery County forces (Note: 2-4" and 2-2" PVC 90° bends).

B. Install a 27 ft. steel pole with twin 50 ft. mast arm and 70 ft. mast arm, signal heads, signs, and 20 ft. lighting arm and 250 watt HPS luminaire (Note: 2-3" PVC 90° bends). The mast arm parallel to Georgia Avenue shall be trimmed to 65 ft. to avoid the overhead cables.

C. Install a 27 ft. steel pole with a 70 ft. mast arm, signal heads, and signs (Note: 2-3" PVC 90° bends).

D. Install ground mounted sign.

E. Install hand hole.

F. Install 1 - 3" Schedule 80 PVC conduit (trenched).

G. Install 1 - 4" Schedule 80 PVC conduit (bored).

H. Install 2 - 4" Schedule 80 PVC conduits (trenched).

I. Install 24" White Heat Applied Thermoplastic Pavement Marking for stop lines.

J. Install 2 - 4" Schedule 80 PVC conduits (bored).

K. Install 200A metered service pedestal.

L. Install 2" schedule 80 PVC conduit (trenched) for power service with 3-1 conductor #4 AWG electrical cables.

M. Install 3" schedule 80 rigid electrical PVC conduit (trenched) with 90° bend at base of PP 779472-8642. Install 3-1 conductor 250 KCMIL electrical cables in conduit and coil 35 feet at the base of the pole for PEPCO to install.

N. Depressed Median (with detectable warning surfaces) to be constructed by others.

O. Install 5" double yellow heat applied thermoplastic pavement marking for lane line.

P. Remove existing signs.

Q. Install ground mounted sign rotated 15°.

R. Eradicate lane line pavement markings within the intersection box.

S. Roadway modifications to be installed by others.

T. Install a 2" schedule 80 PVC conduit (trenched).

U. Pull back existing segment of interconnect from Emory Lane to proposed controller cabinet (see interconnect plan, sheet 2 of 2).

V. Install a new segment of 50-pair Interconnect cable from the new controller through the new conduit and handhole (see interconnect plan, sheet 2 of 2). Use existing conduit and handholes along the Georgia Avenue median to connect new 50-pair interconnect to Emory Lane controller.

W. Install handhole in the existing interconnect conduit run.

## GENERAL NOTES

1. All underground utilities shown on these plans are schematic only and may not be complete. The contractor shall be responsible for notifying "MISS UTILITY" prior to construction so that all utilities may be located in the field. If the contractor perceives that a conflict between the utilities and the intersection beacon control will occur, the contractor shall notify the project engineer immediately so that the conflict may be resolved.
2. All traffic signal foundations shall be installed at the final sidewalk or curb grade for closed sections, highest roadway profile grade for open sections, to meet clearances as specified in MD 801.01, MD 816.03, MD 818.01, MD 818.02, MD 818.04. The contractor shall verify ultimate grades prior to the installation of all signal equipment. Pole foundation locations shown are approximate and are subject to field verification.
3. All conduits are to be installed prior to the installation of the pavement markings.
4. All proposed pavement markings are to be installed in accordance with SHA standards.
5. All pavement markings and crosswalks shall be installed by the signal contractor.
6. Proposed roadway improvements shall be staked prior to installation of signal equipment.

NOTE: BASE MAPPING PROVIDED BY BOHLER ENGINEERING, PC.

## UTILITY LEGEND

| | |
|---|---|
| —— G —— G —— | GAS MAIN |
| -- W ---------- | WATER MAIN |
| -- SAN -------- | SAN. SEWER MAIN |
| — E ———— | OH ELECTRIC CABLES |


Kimley-Horn and Associates, Inc.
13221 Woodland Park Road
Suite 400
Herndon, Virginia 20171
TEL 703 674 1300
FAX 703 674 1350


BY: MICHAEL.BANNER

APPROVALS

TEAM LEADER — 10-30-06
ASST. DIV. CHIEF
DIVISION CHIEF — 10/29/06
OFFICE DIRECTOR — 10-31-06

STATE OF MARYLAND
DEPARTMENT OF TRANSPORTATION
STATE HIGHWAY ADMINISTRATION

OFFICE OF TRAFFIC & SAFETY
TRAFFIC ENGINEERING DESIGN DIVISION

MD 97 (GEORGIA AVENUE) AND EMORY CHURCH ROAD

# INTERSECTION CONTROL BEACON DESIGN

SCALE 1" = 20' DATE 102406 CONTRACT NO. BW996M82

DESIGNED BY GDG COUNTY MONTGOMERY
DRAWN BY FCR LOGMILE 15009710.30
CHECKED BY KWF T.I.M.S. NO. H465
F.A.P. NO. N/A TOD NO.

DRAWING NO. 4464 OF SHEET NO. 1 OF 2