MD 28 IS ASSUMED TO RUN IN AN EAST – WEST DIRECTION

EXISTING SIGNALS HEADS TO REMAIN

1,3 9–10: R Y G

4–5: Y

EXISTING SIGNALS TO BE RELOCATED

2,8: R Y G — 12″

6,7: R, ◁Y Y, ◁G G — 12″

EXISTING SIGNS TO REMAIN

18: EAST / MARYLAND 28 / →

19: WEST / MARYLAND 28 / ←

20: Norbeck RD

14: SIGNAL AHEAD / PREPARE TO STOP WHEN FLASHING

11: Wintergate Dr (right arrow)

15: Wintergate Dr (left arrow)

EXISTING SIGNS TO BE REMOVED

16: 4 PM -7 PM MONDAY - FRIDAY EXCEPT BUSES

EXISTING SIGNS TO BE RELOCATED

12: Wintergate DR < 2800

17: Wintergate DR < 2800

13: ONLY

EXISTING VIDEO DETECTION CAMERA TO REMAIN

a–c

NEMA PHASING

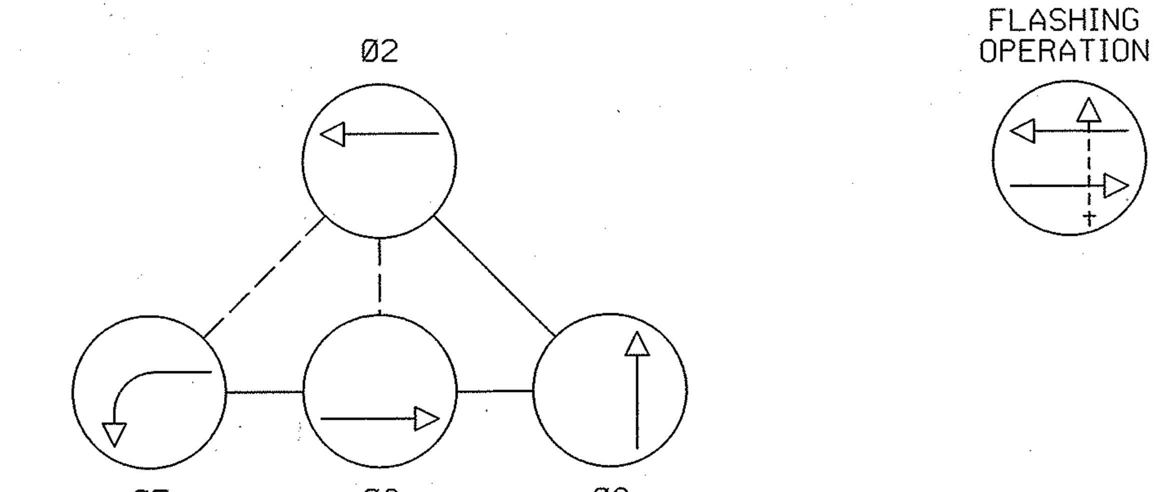

NOTE:
PHASES ASSOCIATED BY A DASHED LINE WILL/MAY OPERATE CONCURRENTLY.
PHASES ASSOCIATED BY A SOLID LINE WILL NOT OPERATE CONCURRENTLY.

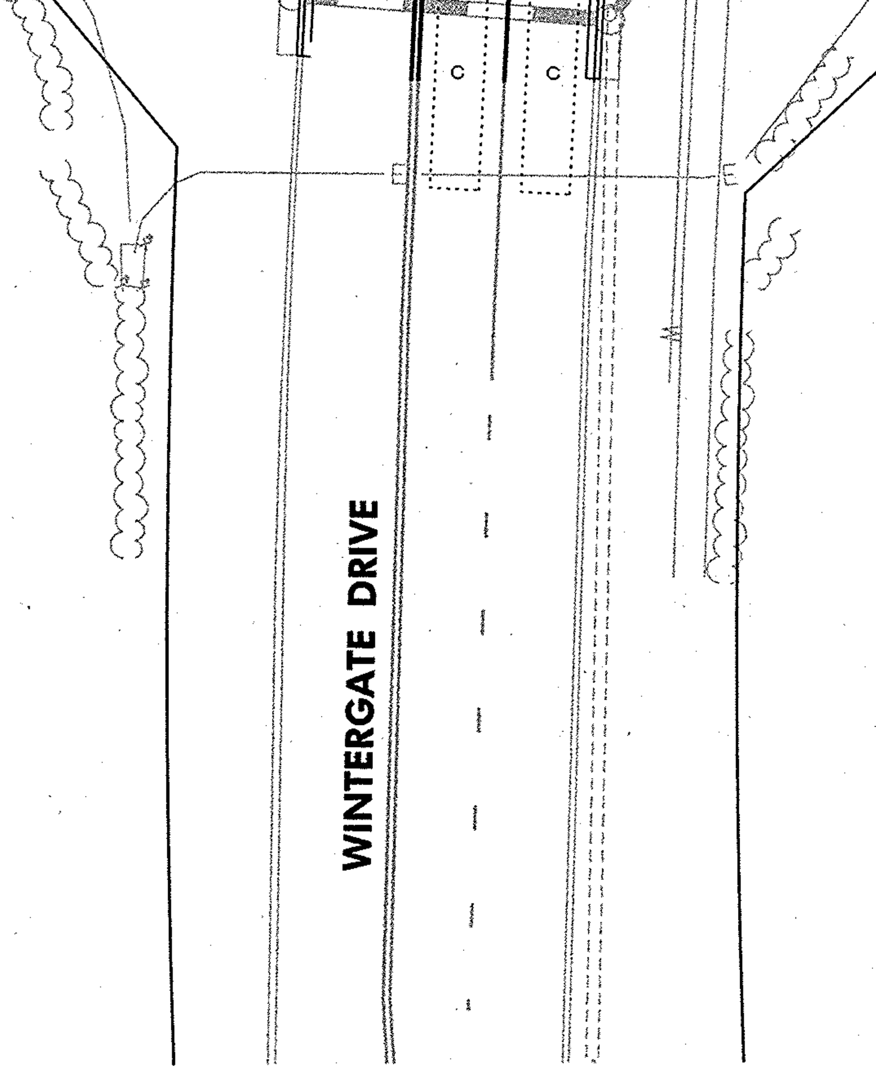

CONSTRUCTION DETAILS

A. RELOCATE TRAFFIC SIGNAL HEAD

B. RELOCATE OVERHEAD SIGN

C. INSTALL 24 INCH WHITE LEAD FREE REFLECTIVE THERMOPLASTIC PAVEMENT MARKINGS (FOR STOP LINE)

D. REMOVE OVERHEAD SIGN

SIGNAL HEAD AND SIGN LAYOUT

SCALE: 1″=20′

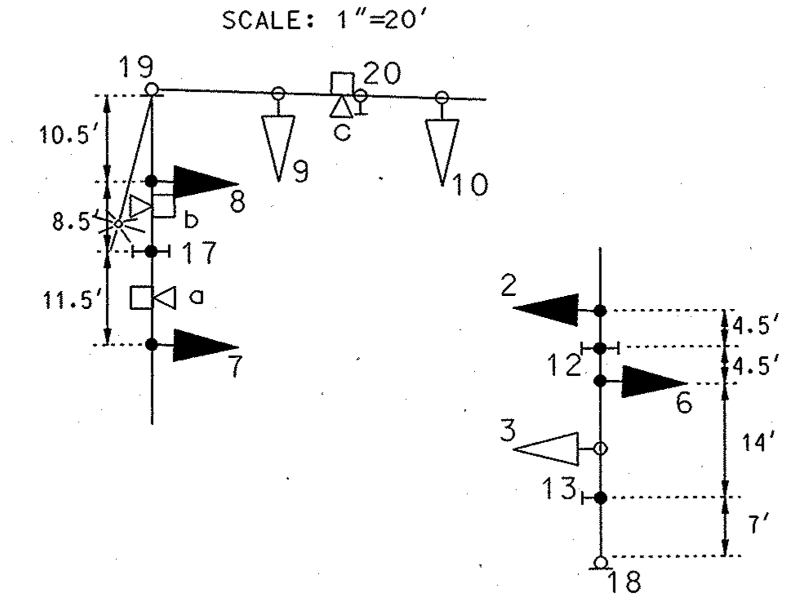

GENERAL NOTES

1. THE CONTRACTOR SHALL REMOVE AND DISPOSE OF ALL ABANDONED ELECTRICAL CABLE.
2. THE CONTRACTOR SHALL COORDINATE WITH THE MONTGOMERY COUNTY TRAFFIC MANAGEMENT CENTER (TMC) (240-777-2100) TO RE-AIM THE VIDEO DETECTION CAMERAS.

UTILITY LEGEND

——SD——SD——	STORM DRAIN
—— G —— G ——	GAS MAIN
—— W —— W ——	WATER MAIN
—— S —— S ——	SEWER MAIN
—— E —— E ——	ELECTRIC CABLES
—— A —— A ——	AERIAL CABLES
—— T —— T ——	TELEPHONE CABLES
—— F —— F ——	FIBER-OPTIC CABLES

BY: CARLOSCS

STV Incorporated
engineers / architects / planners / scientists / construction managers
7125 Ambassador Road Baltimore, MD 21244-2722 (410) 944-9112

APPROVALS: TEAM LEADER / ASST. DIV. CHIEF / DIVISION CHIEF / OFFICE DIRECTOR — ORIGINAL ON FILE

REVISIONS: Ⓐ MODIFY SIGNAL DUE TO GEOMETRIC IMPROVEMENTS 10/2005 — SHA NO. MO6285130 — STV MRK

STATE OF MARYLAND
DEPARTMENT OF TRANSPORTATION
STATE HIGHWAY ADMINISTRATION
OFFICE OF TRAFFIC & SAFETY
TRAFFIC ENGINEERING DESIGN DIVISION

MD 28 (NORBECK ROAD) AND WINTERGATE DRIVE

TRAFFIC SIGNALIZATION PLAN

SCALE 1″=20′ DATE 04/12/2005 CONTRACT NO. MO6285187

DESIGNED BY J. Allen Jr. — COUNTY MONTGOMERY
DRAWN BY D. A. NIES — LOGMILE 15002828.33
CHECKED BY — T.I.M.S. NO. H082
F.A.P. NO. — TOD NO.

DRAWING NO. TS-4351A — SHEET NO. 13 OF 18

PLOTTED: MONDAY, NOVEMBER 28, 2005 AT 01:29 PM
FILE: I:\PROJECTS\11294\17-MD28\SIGNAL\SP01.DGN