MD 140 IS ASSUMED TO RUN IN AN EAST-WEST DIRECTION

PROPOSED SIGNS

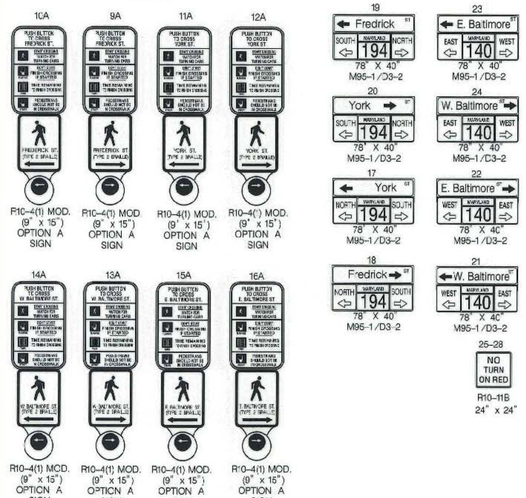

PROPOSED SIGNALS

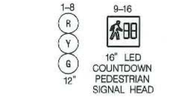

PROPOSED VIDEO DETECTION CAMERA

A, B, C

NEMA PHASING

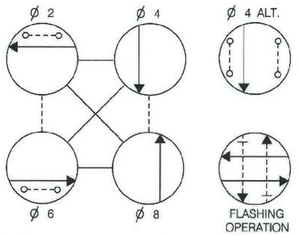

PHASING NOTES:

1.) PHASES ASSOCIATED BY A SOLID LINE WILL NOT OPERATE CONCURRENTLY.
2.) PHASES ASSOCIATED BY A DASHED LINE MAY OPERATE CONCURRENTLY.

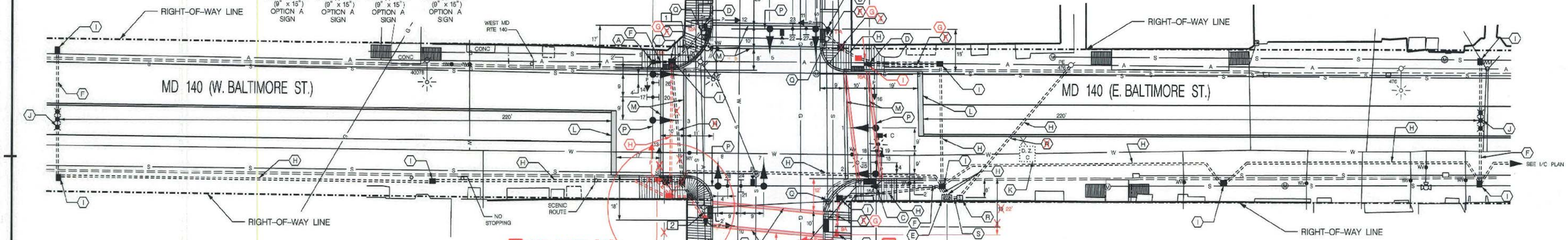

CONSTRUCTION DETAILS

A. INSTALL 16.5 FT MAST ARM POLE WITH A 38 FT. MAST ARM WITH A 15 FT. "T" DIMENSION, SIGNAL HEADS, SIGNS, PEDESTRIAN SIGNAL PUSHBUTTON AND SIGN (NOTE: INSTALL 2-3 IN. SCHEDULE 80, 90 DEGREE CONDUIT BENDS).
B. INSTALL 16.5 FT MAST ARM POLE WITH A 38 FT. MAST ARM WITH A 15 FT. "T" DIMENSION, VIDEO DETECTION CAMERA, SIGNAL HEADS, SIGNS, PEDESTRIAN SIGNAL, PUSHBUTTON AND SIGN (NOTE: INSTALL 2-3 IN. SCHEDULE 80, 90 DEGREE CONDUIT BENDS).
C. INSTALL 27 FT MAST ARM POLE WITH TWIN 50 FT./70 FT. MAST ARMS, VIDEO DETECTION CAMERAS, SIGNAL HEADS, SIGNS PEDESTRIAN SIGNAL, PUSHBUTTON, SIGN, AND 15 FT. STREET LIGHT ARM WITH A 250 WATT HPSV LUMENARE (NOTE: INSTALL 2-3 IN. SCHEDULE 80, 90 DEGREE CONDUIT BENDS).
D. INSTALL 10 FT. PEDESTAL POLE WITH PEDESTRIAN SIGNAL HEAD, PUSHBUTTON AND SIGN (NOTE: INSTALL 1-3 IN. SCHEDULE 80, 90 DEGREE CONDUIT BEND)
2 E. INSTALL BASE MOUNTED CABINET AND CONTROLLER WITH ~~ELECTRIC SERVICE UTILITY EQUIPMENT,~~ AND ALL NECESSARY EQUIPMENT (NOTE: INSTALL 2-4 IN. AND 2-2 IN. SCHEDULE 80, 90 DEGREE CONDUIT BENDS)
F. INSTALL 3 IN. SCHEDULE 80 RIGID ELECTRICAL PVC CONDUIT - SLOTTED
G. INSTALL 3 IN. SCHEDULE 80 RIGID ELECTRICAL PVC CONDUIT - TRENCHED
H. INSTALL 4 IN. SCHEDULE 80 RIGID ELECTRICAL PVC CONDUIT - SLOTTED
I. INSTALL HANDHOLE
J. INSTALL NON-INVASIVE MICRO-LOOP PROBE WITH 500 FT. LEAD-IN
K. VIDEO DETECTION ZONE
L. INSTALL 24 IN. WHITE HEAT APPLIED THERMOPLASTIC PAVEMENT MARKING
M. INSTALL 12 IN. WHITE HEAT APPLIED THERMOPLASTIC PAVEMENT MARKING
N. PROPOSED ELECTRIC SERVICE
O. PROPOSED TELEPHONE SERVICE
P. CUT CLEAN GALVANIZE AND CAP MAST ARM
Q. REMOVE EXISTING STRAIN POLE AND ALL ASSOCIATED EQUIPMENT
R. INSTALL METER SERVICE PEDESTAL
S. INSTALL 2 IN. SCHEDULE 80 RIGID ELECTRICAL PVC CONDUIT - SLOTTED

2 INSET "A"

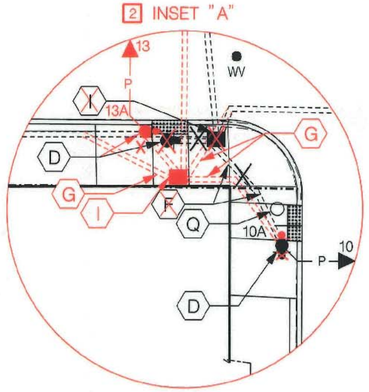

GENERAL NOTES

1. ALL POLES SHALL BE LOCATED 2 FT. FROM THE FACE OF CURBS TO THE FACE OF THE POLES
2. ALL UNDERGROUND AND OVERHEAD UTILITIES SHOWN ON THESE PLANS ARE SCHEMATIC ONLY AND MAY NOT BE COMPLETE. THE CONTRACTOR SHALL BE RESPONSIBLE FOR NOTIFYING MISS UTILITY PRIOR TO CONSTRUCTION SO THAT ALL UTILITIES MAY BE LOCATED IN THE FIELD. IF THE CONTRACTOR PERCEIVES THAT A CONFLICT BETWEEN UTILITIES AND TRAFFIC SIGNAL EQUIPMENT WILL OCCUR, THE CONTRACTOR SHALL NOTIFY THE PROJECT ENGINEER IMMEDIATELY SO THE CONFLICT MAY BE RESOLVED.
3. ALL TRAFFIC SIGNAL FOUNDATIONS SHALL BE INSTALLED AT THE FINAL SIDEWALK OR CURB GRADE FOR CLOSED SECTIONS, HIGHEST ROADWAY PROFILE GRADE FOR OPEN SECTIONS, TO MEET CLEARANCE AS SPECIFIED IN MD 816.03, MD 818.01, MD 818.02, MD 818.04. THE CONTRACTOR SHALL VERIFY ULTIMATE GRADES PRIOR TO THE INSTALLATION OF ALL SIGNAL EQUIPMENT.
4. THE RELOCATION OF SIGNAL HEADS MAY BE REQUIRED DURING THE MAINTENANCE OF TRAFFIC. ADEQUATE ELECTRICAL CABLE SHALL BE PROVIDED TO FACILITATE THESE RELOCATIONS.
2 5. ~~PUSHBUTTONS ARE TO BE LOCATED ADJACENT TO A LEVEL (<1:48) LANDING (32" X 54") ALONG THE PEDESTRIAN ACCESS ROUTE LEADING TO THE CROSSWALK.~~
5 6. LOCATION OF ACCESSIBLE PEDESTRIAN SIGNAL PUSHBUTTONS MUST MEET LOCATION REQUIREMENTS OF MUTCD, SEE 4E.09 AND FIG. 4E.2 AND THE NCHRP PUBLICATION, "ACCESSIBLE PEDESTRIAN SIGNALS: GUIDE TO BEST PRACTICE". IF NOT MET, THE CONTRACTOR IS TO STOP WORK ON PUSHBUTTON LOCATIONS UNTIL A DESIGN WAIVER IS OBTAINED, AND APPROVED BY THE DIRECTOR, OFFICE OF TRAFFIC AND SAFETY.
6 7. THE CONTRACTOR SHALL CONFIRM THE LOCATION OF THE PROPOSED GEOMETRICS PRIOR TO THE INSTALLATION OF THE SIGNAL EQUIPMENT.
7. PUSHBUTTONS ARE TO BE LOCATED SO THAT THEY CAN BE ACTIVATED BY A PERSON IN A WHEELCHAIR REACHING LESS THAN 18" FROM A 60" x 60" LEVEL LANDING AREA WITH A CROSS SLOPE OF LESS THAN OR EQUAL 2%.
2 8. THE 10' SEPARATION BETWEEN PUSHBUTTONS IS TO BE MEASURE FROM FACE OF PUSHBUTTON TO FACE OF PUSHBUTTONS, NOT CENTER OF POLE
9. PUSHBUTTON ARROWS ARE TO BE PARALLEL TO THE CROSSING FOR WHICH THEY ARE INTENDED.
10. THE ADA COMPLIANT SIDEWALK RAMPS ARE TO BE BUILT TO STANDARD AND AS SPECIFIED IN THE ROADWAY PLANS.

UTILITY HEIGHTS

1 TELEPHONE = 22' - 4"
SECONDARY = 25' - 10"

2 SECONDARY = 19' - 11"
TELEPHONE = 21' - 9"
NEUTRAL = 30' - 6"
PRIMARY = 35' - 0"

TRAFFIC CONCEPTS, INC.
325 Gambrills Road
Suite E
Gambrills, MD 21054
(410) 923-7101
FAX (410) 923-6473
EMAIL TRAFFIC.CONCEPTS@COMCAST.NET

APPROVALS	
TEAM LEADER	ORIGINAL ON FILE
ASST. DIV. CHIEF	
DIVISION CHIEF	
OFFICE DIRECTOR	

REVISIONS			
R	-08 INCLUDE ADA RAMPS ADJUST SIGNAL EQUIPMENT REDLINE REVISION NO. 2		
S.R.			
D	9-25-07 RECONSTRUCT SIGNAL SHA NO. CL 6955184		
Z			
C	MODIFY SIGNS 10-02		
MFL	MR	DAZ	

2 REDLINE REVISION NO.2 2008
Approved as Redline 8/28/08

SHA
STATE OF MARYLAND
DEPARTMENT OF TRANSPORTATION
STATE HIGHWAY ADMINISTRATION
OFFICE OF TRAFFIC & SAFETY
TRAFFIC ENGINEERING DESIGN DIVISION

TRAFFIC SIGNAL PLAN
MD 140 AND MD 194
TANEYTOWN, MARYLAND

SCALE 1" = 20' DATE REDRAWN 3-20-9' CONTRACT NO.

DESIGNED BY
DRAWN BY BRUCE THOMPSON JB
CHECKED BY
F.A.P. NO.
COUNTY CARROLL
LOG/MILE 06014021.48
T.I.M.S. NO. H 545
TOD NO.

DRAWING NO. TS -732D
SHEET NO. 200 OF