F H WA REGION NO	STATE	FED. AID PROJ. NO	SHEET NO.	TOTAL SHEETS
3	MD.			

EXISTING SIGNAL AND SIGNS

PROPOSED SIGNALS AND STREET NAME SIGNS

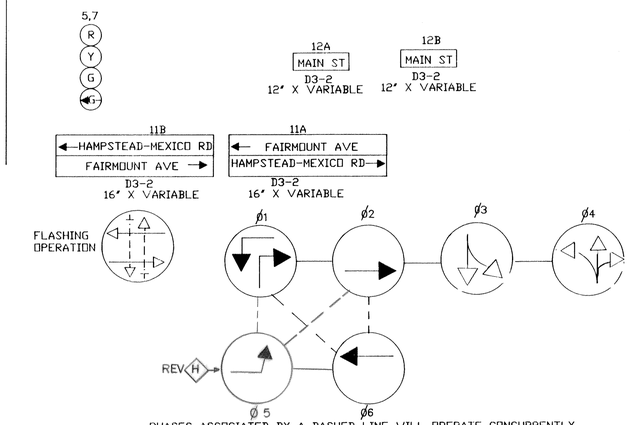

PHASES ASSOCIATED BY A DASHED LINE WILL OPERATE CONCURRENTLY
PHASES ASSOCIATED BY A SOLID LINE WILL NOT OPERATE CONCURRENTLY

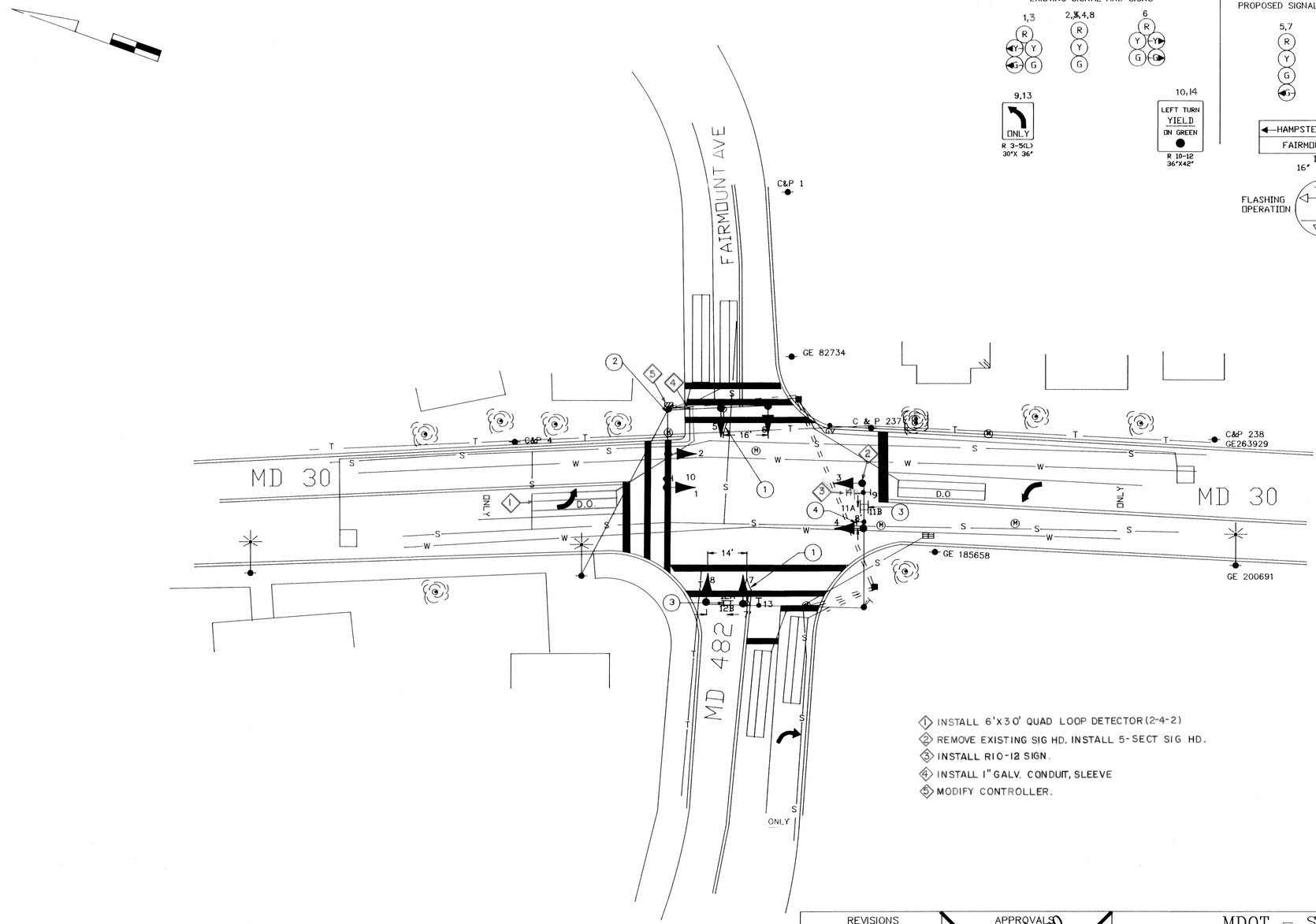

1. INSTALL 6'X30' QUAD LOOP DETECTOR (2-4-2)
2. REMOVE EXISTING SIG HD. INSTALL 5-SECT SIG HD.
3. INSTALL R10-12 SIGN.
4. INSTALL 1" GALV. CONDUIT, SLEEVE
5. MODIFY CONTROLLER.

UTILITY LEGEND

—G—G—	GAS MAIN
—W—W—	WATER MAIN
—S—S—	SEWER MAIN
—E—E—	ELECTRIC CABLES
—A—A—	AERIAL CABLES
—T—T—	TELEPHONE CABLES

REVISIONS	APPROVALS
H 2-21-95 ADD SB MD30 E/P LT	CHIEF, SIGNAL & DESIGN SECTION
DJD	ASST. DISTRICT ENGINEER, TRAFFIC
G 7/90 INSTALLED SIDE ROAD SPLIT PHASING.	CHIEF, TRAFFIC ENGINEERING DIVISION
F 1/1/82 ADDED NEW CONTROLLER TIME BASE COORDINATION AND POLE MONTED CAB.	DEPUTY CHIEF ENGINEER, OFFICE OF TRAFFIC
E REDRAWN TO INCLUDE PROP. GED. & RELOC. SIG EQUIP. S.H.A NO. CL-477-201-771	

NOTE: IS A REVISION TO TS-1020 THE ORIGINAL TS-1020 IS ON FILE

MDOT – STATE HIGHWAY ADMINISTRATION
Office of Traffic
TRAFFIC ENGINEERING DIVISION

SIGNAL #

RE DRAWN BY: DERRICK DICKERSON
ACAD
DES. BY:
CHK. BY:

MD 30 AND MD 482

COUNTY: CARROLL

DATE: 1/7/82
SCALE: 1' = 20"
F.A.P. NO.
S.H.A. NO.

TS/STD. NO. TS-1020 H

SHEET NO. ___ OF ___

06003002.69