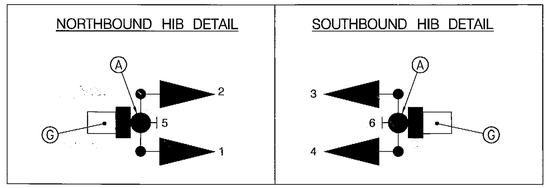

PROPOSED LED SIGNALS

1,2,3,4

Y

12"

PROPOSED SIGNS

5,6

20 MPH

W2-6 (48"x48") FY

W13-1 (24"x24") FY

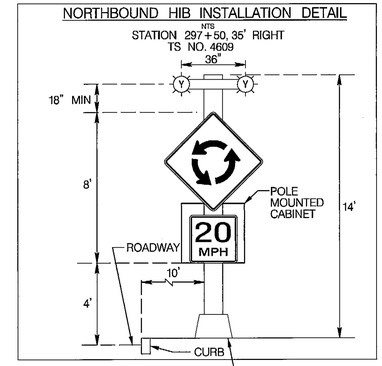

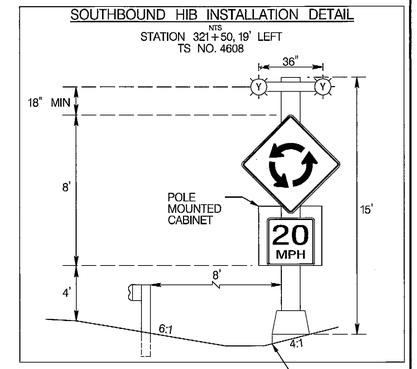

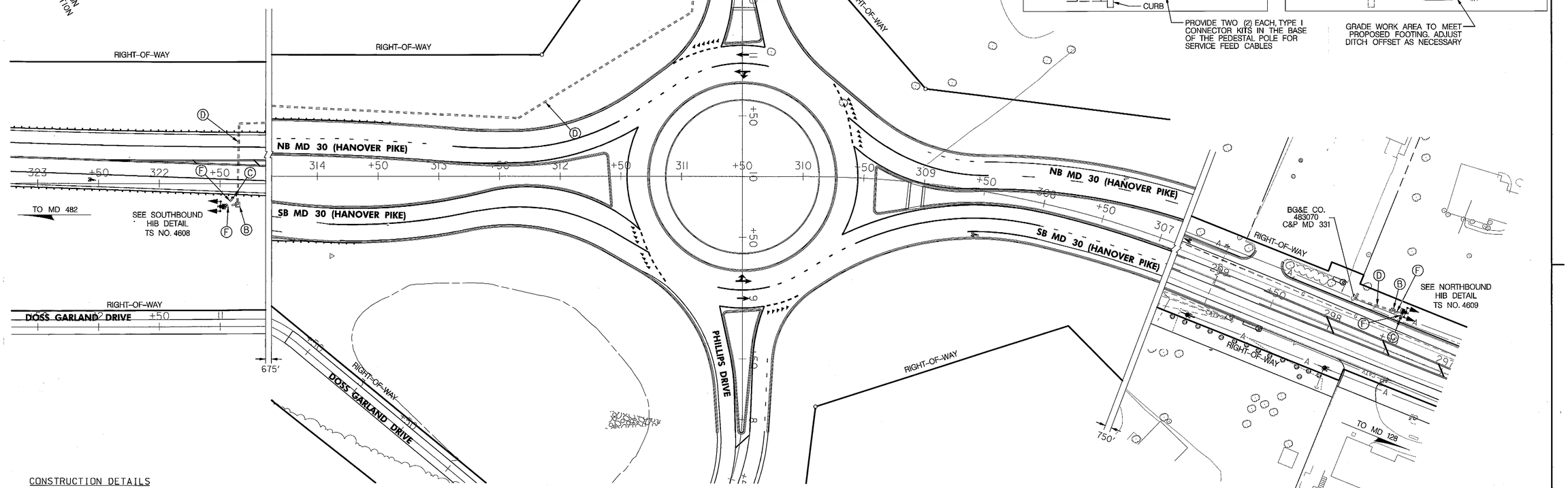

CONSTRUCTION DETAILS

A. INSTALL 20 FT. BREAKAWAY PEDESTAL POLE WITH FOUNDATION, LED SIGNAL HEADS, FLASHER CABINET AND CONTROLLER, AND W2-6 + W13-1 SIGNS (NOTE: 3-2 IN. 90 DEGREE BENDS). CUT AND CAP POLE AS NECESSARY.
B. INSTALL METERED SERVICE PEDESTAL (NOTE: 2-2 IN. 90 DEGREE BENDS).
C. INSTALL ELECTRICAL HANDHOLE.
D. INSTALL 4 IN. SCHEDULE 80 RIGID PVC ELECTRICAL CONDUIT - TRENCHED (PRIOR TO ROADWAY CONSTRUCTION) FOR PROPOSED UNDERGROUND POWER SERVICE. THE CONTRACTOR SHALL CAP AND MARK CONDUIT AND LEAVE A 1 FT. STUB WITH PULL STRING AT BASE OF UTILITY POLE FOR USE BY OTHERS.
F. INSTALL 2 IN. SCHEDULE 80 RIGID PVC ELECTRICAL CONDUIT - TRENCHED
G. INSTALL 36 IN. x 48 IN. CONCRETE PAD, 5 IN. DEPTH

GENERAL NOTES

1. THE CONTRACTOR SHALL VERIFY ALL UNDERGROUND UTILITIES PRIOR TO INSTALLING PROPOSED SIGNAL EQUIPMENT. IF ANY UTILITY CONFLICTS SHOULD ARISE THE CONTRACTOR SHALL CONTACT THE PROJECT ENGINEER.
2. ALL TRAFFIC SIGNAL FOUNDATIONS SHALL BE INSTALLED AT THE FINAL SIDEWALK OR CURB GRADE FOR CLOSED SECTIONS, HIGHEST ROADWAY PROFILE GRADE FOR OPEN SECTIONS, TO MEET CLEARANCES AS SPECIFIED IN MD 816.03, MD 818.01, MD 818.02, MD 818.04. THE CONTRACTOR SHALL VERIFY ULTIMATE GRADES PRIOR TO THE INSTALLATION OF ALL SIGNAL EQUIPMENT.
3. WITHIN 36 IN. OF UNDERGROUND UTILITY LOCATIONS, THE CONTRACTOR SHALL BE REQUIRED TO EXCAVATE FOR FOUNDATION AND CONDUIT BY HAND.
4. THE CONTRACTOR SHALL VERIFY ALL PROPOSED POLE LOCATIONS PRIOR TO INSTALLATION.
5. THE CONTRACTOR SHALL BE RESPONSIBLE FOR ROUTING AND PROPERLY LABELING ALL SIGNAL CABLES. THE SHA SIGNAL SHOP WILL BE RESPONSIBLE FOR ALL INTERNAL CABINET WIRING.
6. ALL WARNING SIGNS SHALL BE FLUORESCENT YELLOW.

UTILITY LEGEND

—E—E—	ELECTRIC CABLES
—A—A—	AERIAL CABLES
—T—T—	TELEPHONE CABLES
—F—F—	FIBER-OPTIC
—SD—SD—	STORM DRAIN
—G—G—	GAS MAIN
—W—W—	WATER MAIN
—S—S—	SEWER MAIN

STV Incorporated

engineers / architects / planners / construction managers

7125 Ambassador Road Baltimore, MD 21244-2722 (410) 944-9112

BY: youngsd

APPROVALS	
PROJECT LEADER	10/24/07
ASST. DIV. CHIEF	10-24-07
DIVISION CHIEF	10/25/07
OFFICE DIRECTOR	10/25/

REVISIONS

STATE OF MARYLAND
DEPARTMENT OF TRANSPORTATION
STATE HIGHWAY ADMINISTRATION

OFFICE OF TRAFFIC & SAFETY
TRAFFIC ENGINEERING DESIGN DIVISION

MD 30 RELOCATED

FROM SOUTH OF WOLF HILL DRIVE TO NORTH OF HAMPSTEAD
SOUTH TIE IN HIB INSTALLATION

TRAFFIC SIGNALIZATION PLAN

SCALE 1" = 40' DATE 8/2007 CONTRACT NO. CL4165370

DESIGNED BY MCG COUNTY CARROLL
DRAWN BY AMT LOGMILE 06003000.96
CHECKED BY BAB CJS T.I.M.S. NO. F407
F.A.P. NO. ACHP-292(001)N,AC-NH-I07-I(9)N TOD NO.

TS NO. 4608 4609 | SG-01 OF 19 | SHEET NO. 13 OF 82

PLOTTED: Friday, September 07, 2007 AT 09:23 AM
FILE: I:\PROJECTS\4012753\4012753_0001\Drawings\TRA\pSG-P001_Md30_Sel.dgn

ISSUED FOR CONSTRUCTION 8/30/2007 - SUBMITTAL 20