PROJECT DESCRIPTION

THIS PROJECT INVOLVES MODIFICATION OF THE EXISTING TRAFFIC CONTROL SIGNAL AT THE INTERSECTION OF MD 30 (MAIN STREET) AND MD 482 (HAMPSTEAD MEXICO RD/ FAIRMOUNT RD) IN CARROLL COUNTY. DETECTABLE WARNING SUFACES, LED VEHICULAR SIGNALS, LED COUNTDOWN PEDESTRIAN SIGNALS, AND APS PEDESTRIAN PUSH-BUTTONS AND SIGNS WILL BE INSTALLED AT THIS LOCATION. MD 30 IS ASSUMED TO RUN IN A NORTH-SOUTH DIRECTION.

INTERSECTION OPERATION

THIS INTERSECTION CURRENTLY OPERATES IN A NEMA SIX-PHASE FULLY TRAFFIC-ACTUATED MODE WITH EXCLUSIVE-PERMISSIVE LEFT TURN PHASES FOR NORTHBOUND AND SOUTHBOUND MD 30,AND SPLIT PHASES FOR MD 482 AND FAIRMOUNT ROAD. ALTERNATE PEDESTRIAN PHASES WILL BE ADDED FOR CROSSING THE NORTH, SOUTH AND WEST LEGS OF THE INTERSECTION. A CONCURRENT PEDESTRIAN PHASE WILL BE ADDED FOR THE EAST AND WEST LEG OF THE INTERSECTION.

CONTROLLER REQUIRMENTS

INSTALL A FULL-TRAFFIC-ACTUATED EIGHT PHASE TRAFFIC SIGNAL CONTROLLER WITH VIDEO DETECTION INTERFACE EQUIPMENT AND INTERSECTION MONITOR WITH BATTERY BACK-UP FOR PHONE DROP HOUSED IN A NEMA SIZE '6' BASE MOUNTED CABINET. AN APS CENTRAL CONTROL UNIT WILL BE INSTALLED BY THE CONTRACTOR.

SPECIAL NOTE

IT IS THE RESPONSIBILITY OF THE CONTRACTOR TO CONFIRM GEOMETRICS PRIOR TO PLACING SIGNAL EQUIPMENT.

UPON COMPLETION OF THIS PROJECT THE CONTRACTOR SHALL NOTIFY MR. ROBERT SNYDER OF SHA AT 410-787-7631 TO ARRANGE FOR THE PHONE LINE INSTALLATION. THE CONTRACTOR IS TO PROVIDE MR. SNYDER WITH THE NEAREST STREET ADDRESS, ZIP CODE, AND TELEPHONE NUMBER.

CONTACT PERSONS FOR DISTRICT # 7 ARE AS FOLLOWS:

MR. DAVE COYNE
DISTRICT ENGINEER
PHONE: (301) 624-8102

MR. RAY JOHNSON
ASSISTANT DISTRICT ENGINEER-MAINTENANCE
PHONE: (301) 624-8105

MR. JOHN CONCANNON
ASSISTANT DISTRICT ENGINEER-TRAFFIC
PHONE: (301) 624-8141

MS. ANDREA ABEND
UTILITY ENGINEER
PHONE: (301) 624-8115

CONTACT PERSONS FOR OOTS ARE AS FOLLOWS:

MR. RICHARD L. DAFF, SR.
CHIEF TRAFFIC OPERATIONS DIVISION
PHONE: (410) 787-7630

MR. ROBERT SNYDER
ASSISTANT DIVISION CHIEF
TRAFFIC OPERATIONS
410-787-7630

MR. ED RODENHIZER
CHIEF, SIGNAL OPERATIONS
410-787-7650

MR. EUGENE BAILEY
CHIEF, SIGN OPERATIONS
410-787-7676

CONTACT PERSON FOR THE UTILITY COMPANY IS AS FOLLOWS:

BGE
GAS & ELECTRIC NEW BUSINESS DEPARTMENT
410-850-4620

EQUIPMENT LIST "A"

A. EQUIPMENT TO BE FURNISHED BY SHA

ITEM NO.	DESCRIPTION	UNIT	QUANTITY
9016	FOUR CHANNEL DETECTOR AMPLIFIER, RACK MOUNT	EA	1
9042	CONTROLLER ASC II WITH TELEMETRY	EA	1
9044	CONTROLLER CABINET, SIZE 6	EA	1
9086	VIDEO DETECTION INTERFACE EQUIPMENT: 1-4 CAMERAS	EA	1
9571	SHEET ALUMINUM SIGN - POLE/MAST ARM MOUNT	SF	7.5

CONSISTING OF:

4 - R10-4(1) (MOD) (9"X 15" - 'MAIN ST') - POLE MOUNT
2 - R10-4(1) (MOD) (9"X 15" - 'HAMPSTEAD MEXICO RD') - POLE MOUNT
2 - R10-4(1) (MOD) (9"X 15" - 'FAIRMOUNT RD') - POLE MOUNT

EQUIPMENT LIST "B"

B. EQUIPMENT TO BE FURNISHED AND/OR INSTALLED BY CONTRACTOR.

ITEM NO.	DESCRIPTION	UNIT	QUANTITY
1001	MAINTENANCE OF TRAFFIC	EA	2
2002	TEST PIT EXCAVATION	CY	9
5004	F&I 12" HEAT APPLIED WHITE PERMANENT PREFORMED THERMOPLASTIC PAVEMENT MARKINGS	LF	280
5005	F&I 24" HEAT APPLIED WHITE PERMANENT PREFORMED THERMOPLASTIC PAVEMENT MARKINGS	LF	80
6001	F&I STANDARD TYPE A COMBINATION CURB AND GUTTER 12" GUTTER PAN 8" DEPTH	LF	105
6002	F&I 4" CONCRETE SIDEWALK	SF	1370
8001	F&I 12" LED SIGNAL HEAD SECTION	EA	36
8002	F&I 2 WIRE CENTRAL CONTROL UNIT	EA	1
8004	F&I 8" LED SIGNAL HEAD SECTION	EA	6
8008	F&I AUDIBLE/TACTILE PEDESTRIAN PUSHBUTTON STATION & SIGNS	EA	8
8009	FURNISH AND INSTALL BREAKAWAY PEDESTAL POLE (ANY SIZE)	EA	7
8014	F&I 16" LED COUNTDOWN PEDESTRIAN SIGNAL HEAD	EA	8
8022	REMOVE & DISPOSE OF EQUIPMENT (PER ASSIGNMENT)	EA	1
8027	F & I 1" DETECTOR SLEEVE GALVANIZED OR FLEXIBLE LIQUID TIGHT	LF	15
8032	DISCONNECT, PULL-BACK AND REROUTE CABLES	LF	130
8035	F&I SCHEDULE 80 RIGID PVC CONDUIT UP TO 4" - TRENCHED	LF	155
8036	F&I SCHEDULE 80 RIGID PVC CONDUIT UP TO 4" - BORED	LF	150
8038	F&I DETECTABLE WARNING SURFACES	SF	64
8039	INSTALL OVERHEAD OR GROUND MOUNT SIGN (INCLUDING ALL HARDWARE)	SF	7.5
8041	F&I NO. 6 AWG STRANDED BARE COPPER GROUND WIRE	LF	245
8043	F&I METERED SERVICE PEDESTAL EMBEDDED	EA	1
8045	F&I ELECTRICAL CABLE 1-CONDUCTOR NO. 4 AWG -THHN/THWN	LF	30
8047	F&I ELECTRICAL HANDHOLE	EA	2
8053	F&I ELECTRICAL CABLE - 2 CONDUCTOR (ALUMINUM SHIELDED)	LF	195
8054	F&I ELECTRICAL CABLE - 2 CONDUCTOR (NO. 14 A.W.G.)	LF	910
8056	F&I ELECTRICAL CABLE - 5 CONDUCTOR (NO. 14 A.W.G.)	LF	960
8057	F&I ELECTRICAL CABLE - 7 CONDUCTOR (NO. 14 A.W.G.)	LF	1125
8059	F&I LOOP WIRE ENCASED IN FLEXIBLE TUBING (NO. 14 AWG)	LF	235
8060	F&I SAW CUT FOR SIGNAL (LOOP DETECTOR)	LF	125
8065	INSTALL CONTROLLER AND CABINET-BASE MOUNT	EA	1
NEG	F&I CONTROL CABLE, VIDEO DETECTION CAMERA TO CONTROLLER, UP TO 500'	EA	4

EQUIPMENT LIST "C"

B. EQUIPMENT TO BE REMOVED BY THE CONTRACTOR AND RETURNED TO SHA.

SHA FORCES SHALL REMOVE THE CONTROLLER AND ALL AUXILLIARY EQUIPMENT FROM THE EXISTING POLE MOUNTED CONTROLLER CABINET. THE CABINET AND ALL OTHER MATERIALS TO BE REMOVED BY THE CONTRACTOR SHALL BECOME THE PROPERTY OF THE CONTRACTOR.

WIRING DIAGRAM

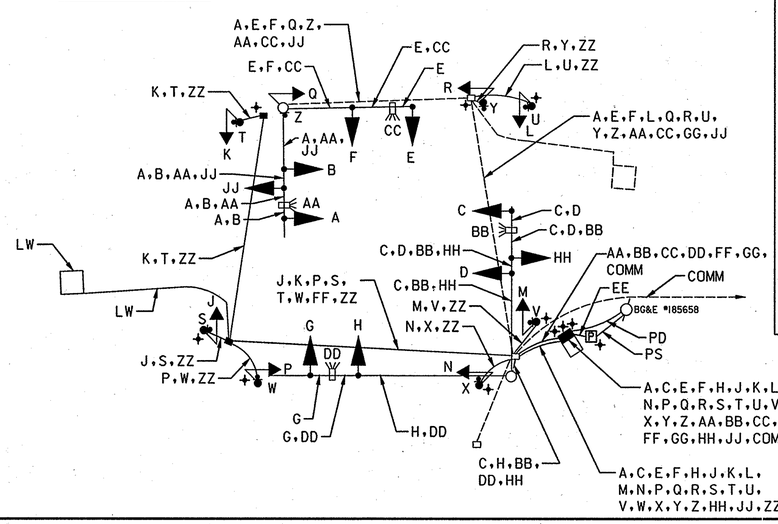

PHASE CHART

	1	1a	2	3	3a	4	5	6	7	8	9	10	11	12	13	14	15	16
PHASE 1 & 5	R G	R G	R	R G	R G	R	R	R G	R	R	DW	DW	DW	DW	DW	DW	DW	DW
1 & 5 CHANGE	TO PHASE 1 & 6 OR PHASE 2 & 5										DW	DW	DW	DW	DW	DW	DW	DW
PHASE 1 & 6	G G	G G	G	R	R	R	R	R G	R	R	DW	DW	DW	DW	DW	DW	DW	DW
1 CHANGE	G Y	G Y	Y	R	R	R	R	R Y	R	R	DW	DW	DW	DW	DW	DW	DW	DW
PHASE 2 & 5	R	R	R	G G	G G	G	R	R	R	R	DW	DW	DW	DW	DW	DW	DW	DW
5 CHANGE	R	R	R	G Y	G Y	Y	R	R	R	R	DW	DW	DW	DW	DW	DW	DW	DW
PHASE 2 & 6	G	G	G	G	G	G	R	R	R	R	DW	DW	DW	DW	WK	WK	WK	WK
PED CLEARANCE	G	G	G	G	G	G	R	R	R	R	DW	DW	DW	DW	FL/DW	FL/DW	FL/DW	FL/DW
2 & 6 CHANGE	Y	Y	Y	Y	Y	Y	R	R	R	R	DW	DW	DW	DW	DW	DW	DW	DW
PHASE 3	R	R	R	R	R	R	R	R	G G	G	DW	DW	DW	DW	DW	DW	DW	DW
3 CHANGE	R	R	R	R	R	R	R	R	Y	Y	DW	DW	DW	DW	DW	DW	DW	DW
PHASE 3 ALT	R	R	R	R	R	R	R	R	G G	G	DW	DW	WK	WK	DW	DW	DW	DW
PED CLEARANCE	R	R	R	R	R	R	R	R	G G	G	DW	DW	FL/DW	FL/DW	DW	DW	DW	DW
3 ALT CHANGE	R	R	R	R	R	R	R	R	Y	Y	DW	DW	DW	DW	DW	DW	DW	DW
PHASE 4	R	R	R	R	R	R	G G	G G	R	R	DW	DW	DW	DW	DW	DW	DW	DW
4 CHANGE	R	R	R	R	R	R	Y	Y Y	R	R	DW	DW	DW	DW	DW	DW	DW	DW
PHASE 4 ALT	R	R	R	R	R	R	G G	G	R	R	WK	WK	DW	DW	DW	DW	DW	DW
PED CLEARANCE	R	R	R	R	R	R	G G	G	R	R	FL/DW	FL/DW	DW	DW	DW	DW	DW	DW
4 ALT CHANGE	R	R	R	R	R	R	Y	Y	R	R	DW	DW	DW	DW	DW	DW	DW	DW
FLASHING OPERATION	FL/Y	FL/Y	FL/Y	FL/Y	FL/Y	FL/Y	FL/R	FL/R	FL/R	FL/R	DARK	DARK	DARK	DARK	DARK	DARK	DARK	DARK

WIRING KEY

A,C,E,F, H,HH,JJ	ELECTRICAL CABLE 7-CONDUCTOR (NO. 14 A.W.G.)
B,D,G,J,K,L, M,N,P,Q,R	ELECTRICAL CABLE 5-CONDUCTOR (NO. 14 A.W.G.)
S,T,U,V,W,X, Y,Z	ELECTRICAL CABLE 2-CONDUCTOR (NO. 14 A.W.G.)
AA,BB,CC,DD	PRE-MANUFACTURED VIDEO DETECTION CABLE - 250 FOOT
EE	ELECTRICAL CABLE 1-CONDUCTOR (NO. 4 AWG-THHN/THWN, 3-RUNS)
FF,GG	ELECTRICAL CABLE 2-CONDUCTOR (ALUMINUM SHIELDED)
LW	LOOP WIRE (NO. 14 AWG)
ZZ	STRANDED BARE COPPER GROUND WIRE (NO. 6 A.W.G.)
COMM	EXISTING 12 PAIR COMMUNICATION CABLE (COIL UNUSED CABLE IN EXISTING HANDHOLES)
PS	UNDERGROUND POWER SERVICE TO BE INSTALLED BY BGE
PD	PHONE DROP FOR TELEPHONE SERVICE TO BE INSTALLED BY VERIZON
+	PROPOSED GROUND ROD

TOD No.: AT783-16
SHA No.: CL417A51/B51
MD 30 @ MD 482

STATE OF MARYLAND
DEPARTMENT OF TRANSPORTATION
STATE HIGHWAY ADMINISTRATION
OFFICE OF TRAFFIC & SAFETY
TRAFFIC ENGINEERING DESIGN DIVISION

MD 30 (MAIN ST) AND MD 482
(HAMPSTEAD MEXICO RD/FAIRMOUNT RD)
HAMPSTEAD, MARYLAND

GENERAL INFORMATION SHEET

RUMMEL, KLEPPER & KAHL, LLP
CONSULTING ENGINEERS
81 MOSHER STREET
BALTIMORE, MARYLAND 21217
TELE:(410)728-2900 FAX:(410)383-3270

SCALE 1" = 20'	DATE 09/2006	CONTRACT NO. AT7835185	
DESIGNED BY TC		COUNTY CARROLL	
DRAWN BY TC		LOGMILE 06003002.69	
CHECKED BY DAE		TIMS NO. G735	
FAP NO.		TOD NO.	
TS NO. 1020GI	DRAWING -	OF	SHEET NO. 2 OF 2

FILE: K:\projects\ 104-134\Task10\DGN\g735gp01.dgn

BY: $USERNAME$