F.H.W.A. REGION NO.	STATE	FED. AID PROJ. NO.	SHEET NO.	TOTAL SHEETS
3	MD.		2	5

REVISION B IS A MODIFICATION TO WORK TO BE COMPLETED UNDER CONTRACT K-411 501 276
THE ORIGINAL T.S 39 IS ON FILE

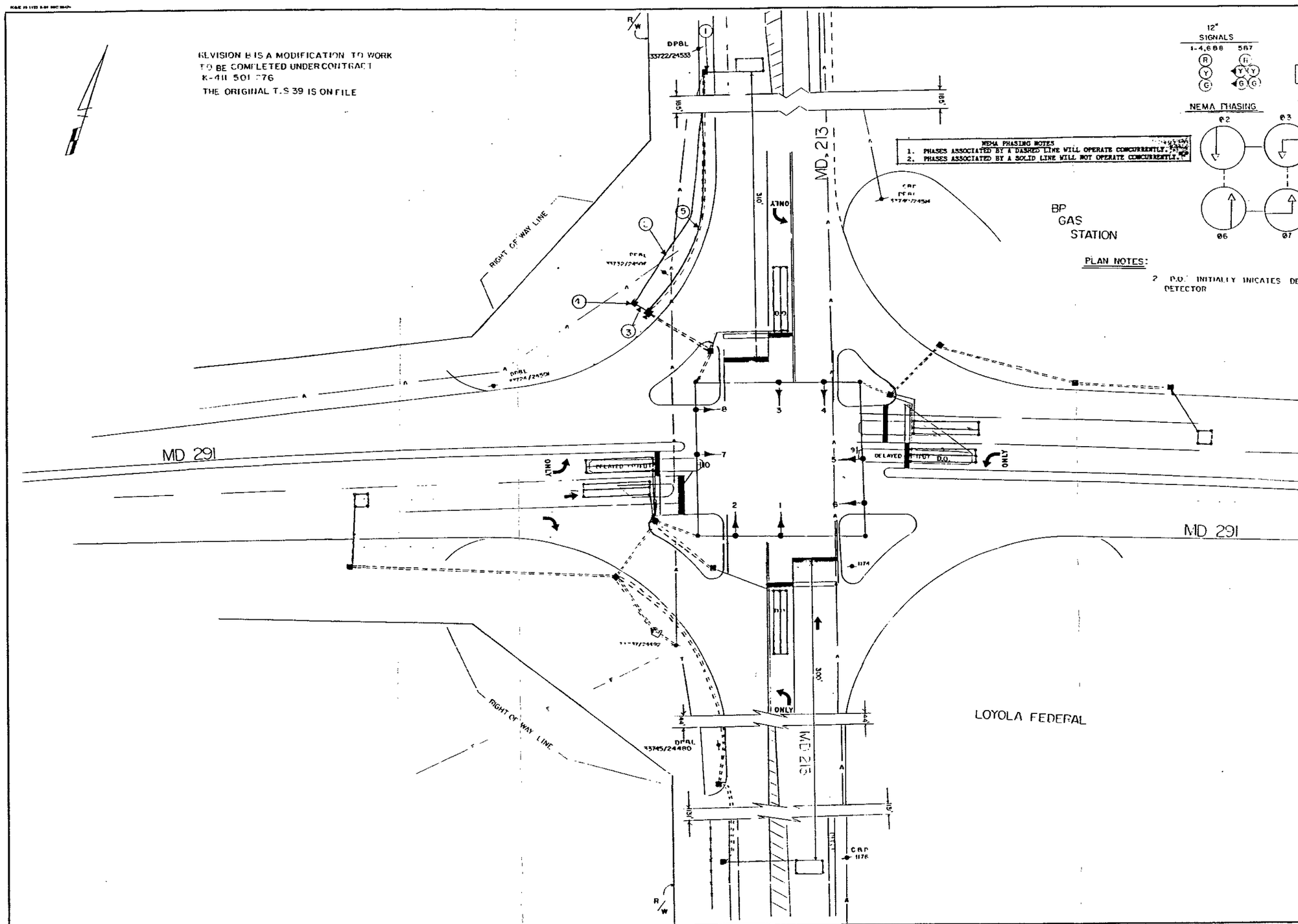

NEMA PHASING NOTES
1. PHASES ASSOCIATED BY A DASHED LINE WILL OPERATE CONCURRENTLY.
2. PHASES ASSOCIATED BY A SOLID LINE WILL NOT OPERATE CONCURRENTLY.

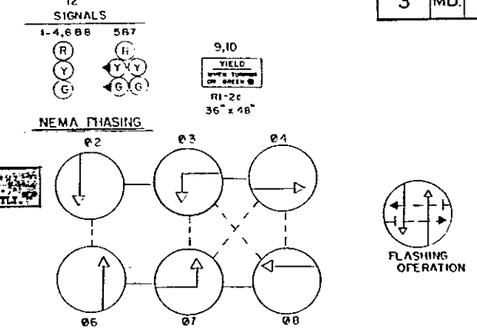

PLAN NOTES:

2 P.O. INITIALLY INICATES DELAY-OUTPUT LOOP DETECTOR

APPROVAL: CHIEF SIGNAL DESIGN SECTION

APPROVAL: REGIONAL TRAFFIC ENGINEER

APPROVAL: CHIEF BUREAU OF TRAFFIC ENGINEERING

APPROVAL: ASS'T. CHIEF ENGINEER TRAFFIC

(B) 6-14-[illegible] RELOCATE HANDBOX AND CONDUIT IN N.W. CORNER DUE TO WIDENING

A 4-7-86 INSTALL MAINLINE LOOPS FOR FULL-ACTUATION

SHA NO. 855-25004

JJD

REDRAWN 4-4-86

ORIGINAL ON FILE

JH SD

REVISIONS

STATE OF MARYLAND
DEPARTMENT OF TRANSPORTATION
STATE HIGHWAY ADMINISTRATION

TRAFFIC DIVISION — BUREAU OF TRAFFIC ENGINEERING

MD 213 & MD. 291

SCALE 1" = 20' DATE 4-4-86 CONTRACT NO.

DRAWN BY: J. HOYAS LT COUNTY: KENT

DESIGNED BY: BRUCE THOMPSON SIGNAL NO.: 14100

CHECKED BY: DIMTRIOS A. ZAPIRIS

DRAWING NO. TS- 39 B

14021301.32