F.H.W.A. REGION NO.	STATE	FED. AID PROJ. NO.	SHEET NO.	TOTAL SHEETS
3	MD			

PROJECT DESCRIPTION

GENERAL

THIS PROJECT INVOLVES THE INSTALLATION OF A NEW TRAFFIC CONTROL SIGNAL AT THE INTERSECTION OF U.S. 13B AND GORDY ROAD IN WICOMICO COUNTY. U.S. 13B IS ASSUMED TO RUN IN A NORTH-SOUTH DIRECTION.

THE EXISTING TRAFFIC CONTROL SIGNAL AT U.S. 13B AND CHESTNUT WAY WILL BE REMOVED AS PART OF THE PROJECT.

INTERSECTION OPERATION

1. NORMAL OPERATION

   THE INTERSECTION WILL OPERATE IN A NEMA FOUR-PHASE, SEMI-TRAFFIC-ACTUATED MODE WITH THE U.S. 13B APPROACHES OPERATING CONCURRENTLY AND THE GORDY ROAD APPROACHES OPERATING WITH SPLIT PHASES.

2. EMERGENCY PRE-EMPTION

   THE INTERSECTION WILL OPERATE AS INDICATED ABOVE, UNLESS AN EMERGENCY VEHICLE PRE-EMPTS THE TRAFFIC SIGNAL AND STOPS ALL APPROACHES EXCEPT NORTHBOUND AND SOUTHBOUND U.S. 13B.

CONTROLLER REQUIREMENTS

INSTALL A FULL-TRAFFIC-ACTUATED, EIGHT-PHASE CONTROLLER WITH SYSTEM PACKAGE AND ONE (1), FOUR-CHANNEL, TIME-DELAY-OUTPUT LOOP DETECTOR AMPLIFIER AND ASSOCIATED HARNESSES HOUSED IN A NEMA SIZE "6" BASE MOUNTED CABINET.

MAINTENANCE OF TRAFFIC

THE FOLLOWING TRAFFIC CONTROL STANDARDS SHALL BE REFERENCED FOR THE PROJECT.

STANDARD NO. MD-104.00 - 104.00-12
STANDARD NO. MD-104.31-01 (FLAGGING OPERATION)
STANDARD NO. MD-104.49-01 (SHOULDER WORK)
STANDARD NO. MD-104.44-01 (LEFT-LANE CLOSURE)
STANDARD NO. MD-104.45-01 (RIGHT-LANE CLOSURE)
STANDARD NO. MD-104.46-01 (CENTER LANE CLOSURE)
STANDARD NO. MD-104.35-01 (LANE SHIFT)
STANDARD NO. MD-104.33-01 (SHOULDER WORK)
STANDARD NO. MD-104.32-01 (INTERSECTION FLAGGING OPERATION)

PROJECT CONTACTS

THE CONTACT PERSONS FOR SHA ARE AS FOLLOWS:

MR. DONNIE DREWER
DISTRICT ENGINEER
PHONE: (410) 543-6720

MR. GENE COFIELL
ASSISTANT DISTRICT ENGINEER - TRAFFIC
PHONE: (410) 543-6715

MR. JAMES R. WRIGHT
ASSISTANT DISTRICT ENGINEER - MAINTENANCE
PHONE: (410) 543-6715

MR. BRUCE W. POOLE
DISTRICT UTILITIES ENGINEER
PHONE: (410) 543-6715

MR. RICHARD L. DAFF, SR.
CHIEF, TRAFFIC OPERATIONS DIVISION
PHONE: (410) 787-7630

WIRING DIAGRAM

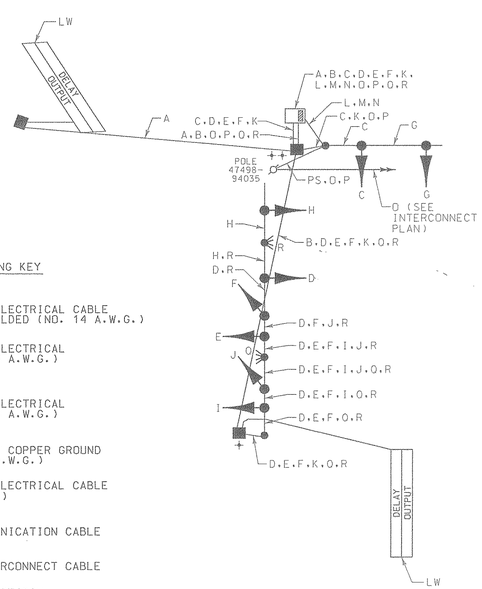

WIRING KEY

- A, B — 2-CONDUCTOR ELECTRICAL CABLE ALUMINUM SHIELDED (NO. 14 A.W.G.)
- C, D, E, F — 7-CONDUCTOR ELECTRICAL CABLE (NO. 14 A.W.G.)
- G, H, I, J — 5-CONDUCTOR ELECTRICAL CABLE (NO. 14 A.W.G.)
- K — STRANDED BARE COPPER GROUND WIRE (NO. 6 A.W.G.)
- L, M, N — 1-CONDUCTOR ELECTRICAL CABLE (NO. 4 A.W.G.)
- O — 12-PAIR COMMUNICATION CABLE
- P — EXISTING INTERCONNECT CABLE
- Q, R — 4-CONDUCTOR OPTICOM DETECTOR CABLE

LW - LOOP WIRE (NO. 14 A.W.G.)
PS - PROPOSED OVERHEAD ELECTRICAL SERVICE
+ - 3/4 IN. X 10 FT. GROUND ROD

EQUIPMENT LIST "A"

A. EQUIPMENT TO BE SUPPLIED BY SHA

ITEM NO.	QUANTITY	DESCRIPTION
9000	1 EACH	12 IN., ONE-WAY, OPTICALLY PROGRAMMED, FOUR-SECTION (R,Y,G,GA) TRAFFIC SIGNAL HEAD - MAST ARM MOUNT.
9000	4 EACH	12 IN., ONE-WAY, THREE-SECTION (R,Y,G) POLYCARBONATE TRAFFIC SIGNAL HEAD WITH FULL TUNNEL VISORS - MAST ARM MOUNT.
9000	1 EACH	27 FT. STEEL POLE WITH 40 FT. MAST ARM AND ANCHOR BOLTS
9002	1 EACH	FOUR-CHANNEL, LOOP DETECTOR AMPLIFIER (DELAY OUTPUT).
9014	1 EACH	12 IN., ONE-WAY, THREE-SECTION (R,Y,G) TRAFFIC SIGNAL HEAD - MAST ARM MOUNT
9015	1 EACH	12 IN., ONE-WAY, FOUR-SECTION (R,Y,G,GA) TRAFFIC SIGNAL HEAD - MAST ARM MOUNT.
9017	1 EACH	12 IN., ONE-WAY, OPTICALLY PROGRAMMED, THREE-SECTION (R,Y,G) TRAFFIC SIGNAL HEAD - MAST ARM MOUNT.
9081	1 EACH	EIGHT-PHASE, FULL-TRAFFIC-ACTUATED CONTROLLER WITH SYSTEM PACKAGE HOUSED IN A NEMA SIZE "6" BASE MOUNTED CABINET.
9089	51 S.F.	SHEET ALUMINUM SIGNS TO CONSIST OF:
		- 1 EACH D-(3)1 SIGN "GORDY ROAD" (VARIABLE X 16 IN.) - MAST ARM MOUNT.
		- 2 EACH R10-11b SIGN (24 IN. X 24 IN.) - MAST ARM MOUNT.
		- 2 EACH W3-3 SIGN (36 IN. X 36 IN.) WITH "NEW" PANEL (30 IN. X 30 IN.) AND FLAGS - GROUND MOUNT.

DIMENSION DETAIL

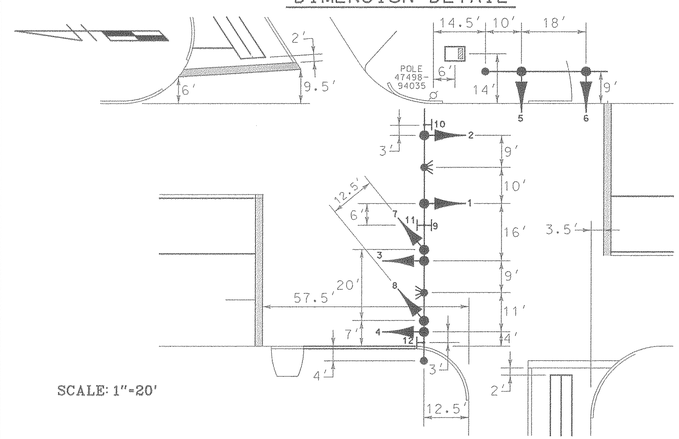

SCALE: 1"=20'

PHASE CHART

	1	2	3	4	5	6	7	8
	R Y G	R Y G	R Y G	R Y G	R Y G	R Y G	R Y G	R Y G
PHASE 2 + 6	G	G	G	G	R	R	R	R
2 + 6 CHANGE	Y	Y	Y	Y	R	R	R	R
PHASE 3	R	R	R	R	R	R	G	G
3 CHANGE	R	R	R	R	R	R	Y	Y
PHASE 4	R	R	R	R	G	G	R	R
4 CHANGE	R	R	R	R	Y	Y	R	R
EMERGENCY	G	G	G	G	R	R	R	R
PRE-EMPTION	Y	Y	Y	Y	R	R	R	R
FLASHING OPERATION	FL/Y	FL/Y	FL/Y	FL/Y	FL/R	FL/R	FL/R	FL/R

EQUIPMENT LIST "B"

B. EQUIPMENT TO BE FURNISHED AND/OR INSTALLED BY THE CONTRACTOR

ITEM NO.	QUANTITY	DESCRIPTION
1001	1 EACH	MAINTENANCE OF TRAFFIC PER ASSIGNMENT
2001	3 EACH	TEST PIT EXCAVATION
2004	11 C.Y.	CLASS 2 EXCAVATION
5007	575 L.F.	6 IN. YELLOW THERMOPLASTIC PAVEMENT MARKING TAPE
5008	150 L.F.	6 IN. WHITE THERMOPLASTIC PAVEMENT MARKING TAPE
5010	130 L.F.	24 IN. WHITE THERMOPLASTIC PAVEMENT MARKING TAPE
5013	510 L.F.	REMOVE EXISTING PAVEMENT MARKINGS - ANY WIDTH
5014	4 EACH	REMOVE EXISTING PAVEMENT MARKING LETTER OR ARROW
6001	16 S.F.	4 IN. CONCRETE SIDEWALK
6002	80 L.F.	STANDARD TYPE A COMBINATION CURB AND GUTTER 12 IN. GUTTER PAN,8 IN. DEPTH
8001	10 C.Y.	FURNISH AND INSTALL CONCRETE FOR SIGNAL FOUNDATION
8006	2 EACH	CUT, CLEAN, GALVANIZE AND CAP TRAFFIC SIGNAL STRUCTURE
8008	1 EACH	FURNISH AND INSTALL 3 IN. WEATHERHEAD
8011	8 EACH	INSTALL SIGNAL HEAD (ANY TYPE)
8012	2 EACH	FURNISH AND INSTALL OPTICOM DETECTOR EYE
8013	1 EACH	FURNISH AND INSTALL OPTICOM CARD RACK
8014	1 EACH	FURNISH AND INSTALL DISCRIMINATOR MODULE
8020	1 EACH	INSTALL CONTROLLER AND CABINET - BASE MOUNT
8021	260 L.F.	SAW CUT FOR SIGNAL (LOOP DETECTOR)
8023	20 L.F.	FURNISH AND INSTALL 1 IN. LIQUID-TIGHT FLEXIBLE NON-METALLIC CONDUIT FOR DETECTOR SLEEVE
8024	20 L.F.	FURNISH AND INSTALL 2 IN. SCHEDULE 80 RIGID PVC CONDUIT - TRENCHED
8030	40 L.F.	FURNISH AND INSTALL 4 IN. SCHEDULE 80 RIGID PVC CONDUIT - TRENCHED
8031	135 L.F.	FURNISH AND INSTALL 4 IN. SCHEDULE 80 RIGID PVC CONDUIT - SLOTTED
8033	3 EACH	FURNISH AND INSTALL ELECTRICAL HANDHOLE
8034	3 EACH	FURNISH AND INSTALL GROUND ROD - 3/4 IN. DIAMETER X 10 FT. LENGTH
8037	360 L.F.	FURNISH AND INSTALL 4-CONDUCTOR OPTICOM DETECTOR CABLE
8038	4600 L.F.	FURNISH AND INSTALL 12 PAIR COMMUNICATION CABLE, SELF SUPPORTING (OVERHEAD)
8040	960 L.F.	FURNISH AND INSTALL LOOP WIRE ENCASED IN FLEXIBLE TUBING (NO 14. A.W.G.)
8041	240 L.F.	FURNISH AND INSTALL ELECTRICAL CABLE - 2 CONDUCTOR (NO. 14 A.W.G.) ALUMINUM SHIELDED
8044	100 L.F.	FURNISH AND INSTALL ELECTRICAL CABLE - 5 CONDUCTOR (NO. 14 A.W.G.)
8045	650 L.F.	FURNISH AND INSTALL ELECTRICAL CABLE - 7 CONDUCTOR (NO. 14 A.W.G.)
8049	140 L.F.	FURNISH AND INSTALL NO. 6 A.W.G. STRANDED BARE COPPER GROUND WIRE
8050	75 L.F.	FURNISH AND INSTALL ELECTRICAL CABLE 1-CONDUCTOR NO. 4 A.W.G. - THHN/THWN
8052	40 L.F.	FURNISH AND INSTALL WOOD SIGN SUPPORTS 4 IN. X 6 IN.
8053	32 S.F.	INSTALL GROUND MOUNTED SIGN
8054	19 S.F.	INSTALL OVERHEAD SIGN
8058	2 EACH	REMOVE AND DISPOSE OF EXISTING FOUNDATION 12 IN. BELOW GRADE
8059	1 EACH	REMOVAL OF EXISTING CONTROLLER, CABINET AND GALVANIZED SIGNAL STRUCTURE
8060	1 EACH	DELIVERY OF REMOVED CONTROLLER, CABINET AND GALVANIZED SIGNAL STRUCTURE
8061	1 EACH	REMOVE AND DISPOSE OF EXISTING MATERIAL AND EQUIPMENT PER ASSIGNMENT
8070	1 EACH	FURNISH AND INSTALL CONTROL AND DISTRIBUTION EQUIPMENT (120/240V, 1 PHASE 3 WIRE SYST)
8079	1 EACH	INSTALL STEEL POLE AND SINGLE MAST ARM
8084	1 EACH	FURNISH AND INSTALL MAST ARM POLE AND 70 FT. MAST ARM
NEG.	1 EACH	RELOCATE EXISTING ANCHOR
NEG.	LUMP SUM	CUT, PULL-BACK AND RE-FEED EXISTING INTERCONNECT CABLE

WR&A
Whitman, Requardt and Associates
Engineers and Planners
2315 Saint Paul Street
Baltimore, Maryland 21218
(410) 235-3450

REVISIONS	APPROVALS	REVISIONS
	ASSISTANT DIVISION CHIEF	
	ASST. DISTRICT ENGINEER, TRAFFIC	
	CHIEF, TRAFFIC ENGINEERING DESIGN DIVISION	
	DIRECTOR, OFFICE OF TRAFFIC & SAFETY	

MARYLAND DOT - STATE HIGHWAY ADMINISTRATION
Office of Traffic & Safety
TRAFFIC ENGINEERING DESIGN DIVISION
GENERAL INFORMATION SHEET
U.S. 13B AND GORDY ROAD

DATE: 7-21-98	DRAWN BY: S.BLOSS	F.A.P. NO.	PLAN SHEET NO.:	SHEET NO.
SCALE: NONE	DESIGNED BY: N.LEARY	S.H.A. NO. AWR-76A5D/B5D		2 OF 3
APPROVED BY:	CHECKED BY: T.HANNAN	COUNTY WICOMICO		