PHASE CHARTS

TS 1477 M
MD 924 AND PENNSYLVANIA AVENUE

	1	2	3	4	5	6	7	8	9	10	11	12	13	14
PHASE 2	G	G	R	R	R	R	WK	WK	WK	WK	DW	DW	DW	DW
PED. CLEARANCE	G	G	R	R	R	R	FL/DW	FL/DW	FL/DW	FL/DW	DW	DW	DW	DW
2 CHANGE	Y	Y	R	R	R	R	DW	DW	DW	DW	DW	DW	DW	DW
PHASE 4 + 8	R	R	G	G	G	G	DW	DW	DW	DW	DW	DW	DW	DW
4 + 8 CHANGE	R	R	Y	Y	Y	Y	DW	DW	DW	DW	DW	DW	DW	DW
PHASE 4 + 8 ALT	R	R	R	G	G	G	DW	DW	WK	WK	WK	WK	WK	WK
PED. CLEARANCE	R	R	R	G	G	G	DW	DW	DW	DW	FL/DW	FL/DW	FL/DW	FL/DW
4 + 8 ALT CHANGE	R	R	R	Y	Y	Y	DW	DW	DW	DW	DW	DW	DW	DW
FLASHING OPERATION	FL/Y	FL/Y	FL/R	FL/R	FL/R	FL/R	DARK	DARK	DARK	DARK	DARK	DARK	DARK	DARK

TS 1478 E
MD 924 AND OFFICE STREET

	1	2	3	4	5	6	7	8
PHASE 2	G	G	R	R	WK	WK	DW	DW
PED. CLEARANCE	G	G	R	R	FL/DW	FL/DW	DW	DW
2 CHANGE	Y	Y	R	R	DW	DW	DW	DW
PHASE 4	R	R	G	G	DW	DW	DW	DW
4 CHANGE	R	R	Y	Y	DW	DW	DW	DW
PHASE 4 ALT	R	R	G	G	DW	DW	WK	WK
PED. CLEARANCE	R	R	G	G	DW	DW	FL/DW	FL/DW
4 ALT CHANGE	R	R	Y	Y	DW	DW	DW	DW
FLASHING OPERATION	FL/Y	FL/Y	FL/R	FL/R	DARK	DARK	DARK	DARK

TS 1472 O
MD 924 AND US 1 BUSINESS

	1	2	3	4	5	6	7	8	9	10	11	12
PHASE 2	G	G	R	R	WK	WK	WK	WK	DW	DW	DW	DW
PED. CLEARANCE	G	G	R	R	FL/DW	FL/DW	FL/DW	FL/DW	DW	DW	DW	DW
2 CHANGE	Y	Y	R	R	DW	DW	DW	DW	DW	DW	DW	DW
PHASE 4	R	R	G	G	DW	DW	DW	DW	DW	DW	DW	DW
4 CHANGE	R	R	Y	Y	DW	DW	DW	DW	DW	DW	DW	DW
PHASE 4 ALT	R	R	G	G	DW	DW	DW	DW	WK	WK	WK	WK
PED. CLEARANCE	R	R	G	G	DW	DW	DW	DW	FL/DW	FL/DW	FL/DW	FL/DW
4 ALT CHANGE	R	R	Y	Y	DW	DW	DW	DW	DW	DW	DW	DW
FLASHING OPERATION	FL/Y	FL/Y	FL/R	FL/R	DARK	DARK	DARK	DARK	DARK	DARK	DARK	DARK

WIRING DIAGRAMS

MD 924 AND PENNSYLVANIA AVENUE

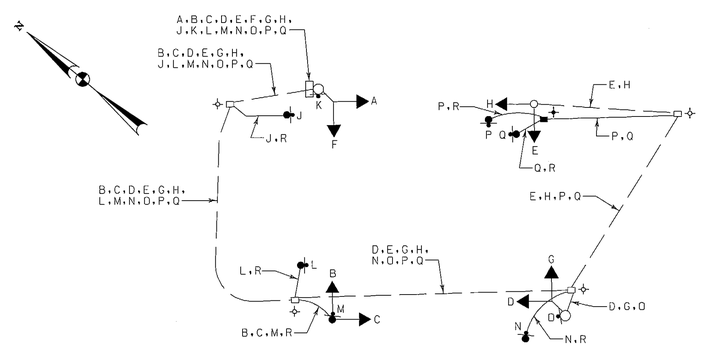

WIRING KEY

- A, B, C, D, E — 5-CONDUCTOR ELECTRICAL CABLE (NO. 14 A.W.G.)
- F, G, H — EXISTING 5-CONDUCTOR ELECTRICAL CABLE (NO. 14 A.W.G.)
- J, K, L, M, N, O, P, Q — 2-CONDUCTOR ELECTRICAL CABLE (NO. 14 A.W.G.)
- R — STRANDED BARE COPPER GROUND WIRE (NO. 6 A.W.G.)
- ✢ – 3/4 IN. X 10 FT. GROUND ROD
- ✧ – EXISTING 3/4 IN. X 10 FT. GROUND ROD

MD 924 AND OFFICE STREET

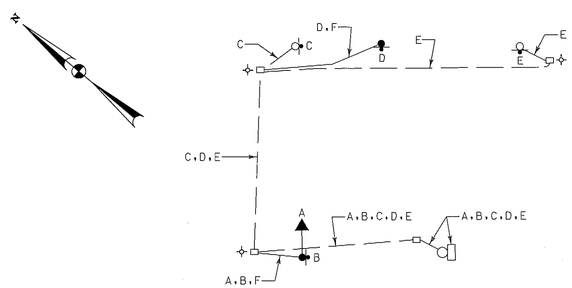

WIRING KEY

- A — 5-CONDUCTOR ELECTRICAL CABLE (NO. 14 A.W.G.)
- B, C, D, E — 2-CONDUCTOR ELECTRICAL CABLE (NO. 14 A.W.G.)
- F — STRANDED BARE COPPER GROUND WIRE (NO. 6 A.W.G.)
- ✧ – EXISTING 3/4 IN. X 10 FT. GROUND ROD

MD 924 AND US 1 BUSINESS

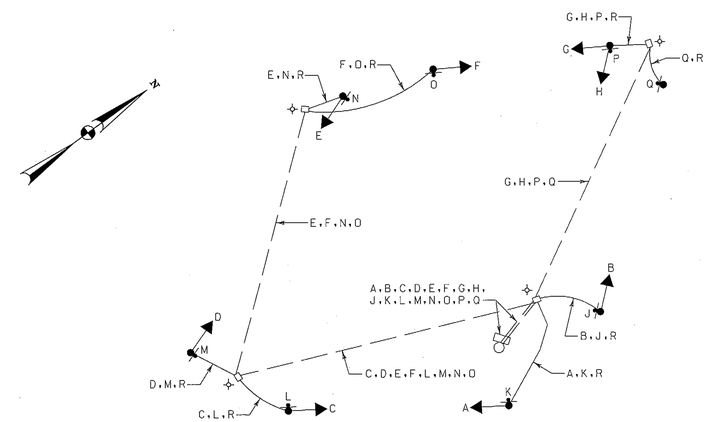

WIRING KEY

- A, B, C, D, E, F, G, H — 5-CONDUCTOR ELECTRICAL CABLE (NO. 14 A.W.G.)
- J, K, L, M, N, O, P, Q — 2-CONDUCTOR ELECTRICAL CABLE (NO. 14 A.W.G.)
- R — STRANDED BARE COPPER GROUND WIRE (NO. 6 A.W.G.)
- ✧ – EXISTING 3/4 IN. X 10 FT. GROUND ROD

WR&A
WHITMAN, REQUARDT & ASSOCIATES, LLP
801 South Caroline Street, Baltimore, Maryland 21231

BY: sbloss

STATE OF MARYLAND
DEPARTMENT OF TRANSPORTATION
STATE HIGHWAY ADMINISTRATION

OFFICE OF TRAFFIC & SAFETY
TRAFFIC ENGINEERING DESIGN DIVISION

MD 924 (Bond ST) @ PENNSYLVANIA AVE TS 1477
MD 924 (Bond ST) @ OFFICE ST TS 1478 E
MD 924 (Bond ST/ KENMORE AVE) at US 1 BUS (Balt Pike) TS 1472 O
Bel Air, Maryland

GENERAL INFORMATION SHEET

SCALE NONE ADVERTISED DATE 6/15/2011 CONTRACT NO. HA3885177

DESIGNED BY S. Bloss
DRAWN BY S. Bloss
CHECKED BY N. Leary
F.A.P. NO.

COUNTY Harford
LOGMILE 12800102.58
TIMS NO. K859
TOD NO.

TS NO. 1472 O | DRAWING TSP – 6 | OF 7 | SHEET NO. 162B OF 162

PLOTTED: Wednesday, September 07, 2011 AT 02:40 PM
FILE: N:\31669-137\CADD\pSG-N006_md924.dgn

TS 1478 E
TS 1477 M