F.H.W.A. REGION NO.	STATE	FED. AID PROJ. NO.	SHEET NO.	TOTAL SHEETS
3	MD	SEE TITLE SHEET		

PROJECT DESCRIPTION

I. General

This portion of the project involves the modification of an existing traffic control signal with interconnect at the intersection MD 924 (Bond Street) and MD 22 (Churchville Road) in Harford County. MD 924 is assumed to run in a east - west direction.

II. Intersection Operation

No change to the existing signal operations are required for the traffic signals along Bond Street with the exception of the addition of a pedestrian phase across the east leg of MD 924 (Bond Street) at MD 22 (Churchville Road).

III. Special Notes

1.) Maintenance of traffic will be handled by the contractor utilizing the following standard plates for traffic control: 104.00 - 104.00-30. 104.32-02. 104.33-02. 104.37-02. 104.38-02. 104.30-02104.40-02. 104.41-02.

2.) The contractor shall remove all existing traffc signal interconnect cable for existing conduits & handholes.

3.) The following are SHA District 4 Contact persons:

Mr. Richard L. Daff, Sr.
Chief, Traffic Operations
Division (410) 787-7630

Mr. Dave Malkowski
District Engineer
(410) 321-3461

Mr. Randall Scott
Asst. District Engineer - Traffic
(410) 321-3514

Mr. David Ramsey
Asst. District Engineer - Maintenance (Acting)
(410) 321 3468

Mr. Joseph McMahon
Asst. District Engineer- Utility
(410) 321-3456

EQUIPMENT LIST

A. Equipment to be supplied by the Administration

Item No.	Quantity	Units	Specification Section	Description
	8	EA	814	9 in. one-way 2 section pedestrian signal head - pedestal mount
	2	EA		Pedestrian push button and sign
	4	EA	816	Quick connect telemetry panel with harness.
	4	EA	816	D-panel

EQUIPMENT LIST

B. Equipment to be furnished and/or installed by the Contractor.

Item No.	Quantity	Units	Specification Section	Description
	4	CY	205	Test pit excavation
3	240	LF	555	Furnish and install 24 **in. white permanent preformed** pavement marking tape.
3	740	LF	555	Furnish and install 12 **in. white permanent preformed** pavement marking tape.
	3	CY	801	Furnish and install concrete for signal foundation.
	16	EA	804	Furnish and install ground rod -3/4 in. diameter x 10 ft. length.
	550	LF	805	Furnish and install 2 in. schedule 80 rigid PVC conduit - Trenched.
	130	LF	805	Furnish and install 3 in. schedule 80 rigid PVC conduit - Slotted.
	850	LF	810	Furnish and install No. 6 AWG standard bare copper ground wire.
	570	LF	810	Furnish and install electrical cable - 7 conductor (No. 14 AWG).
	1500	LF	810	Furnish and install 12 pair jelly filled traffic signal interconnect cable (19 AWG)
	3	EA	811	Furnish and install electrical handhole
	8	EA	814	Install signal head - any type
	4	EA	SP	Furnish and install 10 ft. Pedestal pole with breakaway base
	2	EA	817	Install pedestrian push button and sign
	LS	LS		Remove & despose of existing materials
	13	EA	811	Adjust existing handhole frame.
	11	EA	811	Furnish and install grounded type handhole cover and strap.
	9	EA	804	Furnish and install grounding terminal.
	2	EA	805	Cut and re-thread existing conduit.
	10	EA	808	Furnish and install 2 in. galvanized steel conduit - trenched.

WIRING DIAGRAM

MD 924 (BOND ST) AT PENNSYLVANIA AVE

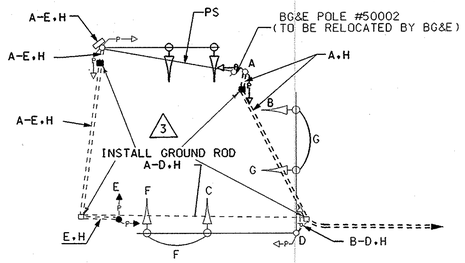

WIRING KEY

A-E = 7 CONDUCTOR ELECTRICAL CABLE (NO. 14 AWG)
F.G = 5 CONDUCTOR ELECTRICAL CABLE (NO. 14 AWG)
H = 1 CONDUCTOR (NO. 6 AWG) STRANDED BARE COPPER GROUND WIRE
PS = POWER SERVICE

WIRING DIAGRAM

MD 924 (BOND ST) AT OFFICE ST

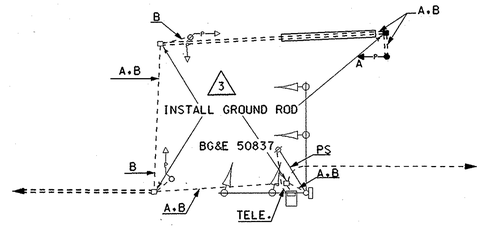

WIRING KEY

A = 7 CONDUCTOR ELECTRICAL CABLE (NO. 14 AWG)
B = 1 CONDUCTOR (No. 6 AWG) STRANDED BARE COPPER GROUND WIRE
PS = POWER SERVICE
TELE = TELEPHONE CONNECTION

WIRING DIAGRAM

MD 924 (BOND ST) AT MD 22 (CHURCHVILLE RD)

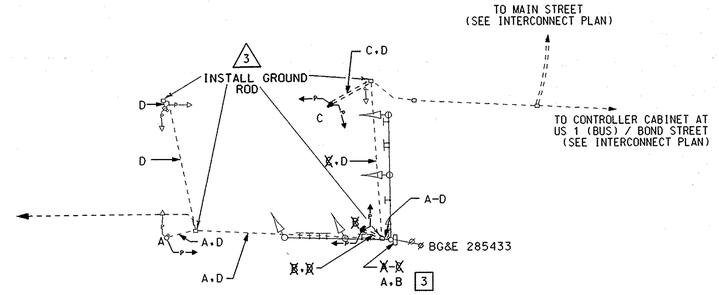

WIRING KEY

3 A.B ~~A-C~~= 7 CONDUCTOR ELECTRICAL CABLE (NO. 14 AWG)
D= 1 CONDUCTOR ELECTRICAL CABLE (NO. 6 AWG) STRANDED BARE COPPER WIRE

WIRING DIAGRAM

MD 924 (BOND ST) AT BUS. US 1

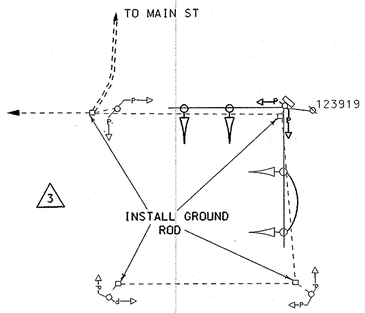

EQUIPMENT LIST

B. Equipment to be furnished and/or installed by the Contractor.

Item No.	Quantity	Units	Specification Section	Description
3	40	LF	810	FURNISH AND INSTALL ELECTRICAL CABLE - 5 CONDUCTOR (No. 14 AWG).
3	2	EA	555	FURNISH AND INSTALL PERMANENT PREFORMED PAVEMENT MARKING ARROW.
3	4	EA	555	FURNISH AND INSTALL PERMANENT PREFORMED PAVEMENT MARKING LETTER.

PHASING SEQUENCE CHART

(MD 924 at Churchville Road)

	1	2	3	4	5	6	7	8	9	10	11	12
PHASE 2	G	G	R	R	W	W	W	W	DW	DW	DW	DW
PED CLEAR	G	G	R	R	FL/DW	FL/DW	FL/DW	FL/DW	DW	DW	DW	DW
PHASE 2 CHANGE	Y	Y	R	R	DW	DW	DW	DW	DW	DW	DW	DW
PHASE 4	R	R	G	G	DW	DW	DW	DW	DW	DW	DW	DW
PHASE 4 CHANGE	R	R	Y	Y	DW	DW	DW	DW	DW	DW	DW	DW
PHASE 4 ALT	R	R	G	G	DW	DW	DW	DW	W	W	W	W
PED CLEAR	R	R	G	G	DW	DW	DW	DW	FL/DW	FL/DW	FL/DW	FL/DW
PHASE 4 ALT CHANGE	R	R	Y	Y	DW	DW	DW	DW	DW	DW	DW	DW
FLASHING OPERATION	FL/Y	FL/Y	FL/R	FL/R	DARK	DARK	DARK	DARK	DARK	DARK	DARK	DARK

R= RED
Y= YELLOW
G= GREEN
W= WALK
DW= DON'T WALK
FL= FLASHING

REVISIONS
3 Redline No.3 10-23-98 Revised based on HDD comments
DMP DCI 3 ADDENDUM 3 MARCH 5, 1998

CONSULTING ENGINEERS
COLUMBIA, MARYLAND

APPROVALS
ASST. DIVISION CHIEF, TEDD
ASST. DISTRICT ENGINEER, TRAFFIC
CHIEF, TRAFFIC ENGINEERING DESIGN DIVISION
DIRECTOR, OFFICE OF TRAFFIC & SAFETY

MARYLAND DOT - STATE HIGHWAY ADMINISTRATION
Office of Traffic & Safety
TRAFFIC ENGINEERING DESIGN DIVISION
GENERAL INFORMATION SHEET

LOGMILE #: 12002200.00 DATE / /

DRAWN BY:	R CICCHINI	F.A.P. NO.		PLAN SHEET NO.:	SHEET NO.
CHECK BY:		S.H.A. NO.	HA 1265184		42 OF 66
SCALE:	NTS	COUNTY	HARFORD		

E:\BOND\RedLines\rlsw03m924.dgn
30-JUN-1999 16:11

FILENAME:F:\PROJECTS\95240\USISYSTES\SW03M924.DGN