DRILL HOLES

BORDER REV: DATE: June 1, 2004

MD 165 IS ASSUMED TO RUN IN A NORTH-SOUTH DIRECTION

EXISTING SIGNS

11,12,14 — W3-3 (36" X 36")

13 — LEFT TURN / YIELD / ON GREEN — R10-12 36"x 42"

15 — Baldwin Mill Rd — D3-2 VARIABLE X 16"

16 — SOUTH / MARYLAND 165 / NORTH — M95-1 (72" X 24")

WIRING DIAGRAM

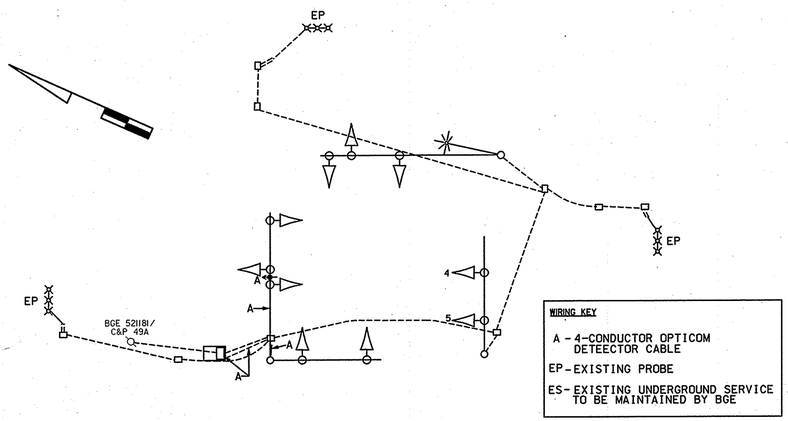

WIRING KEY

A - 4-CONDUCTOR OPTICOM DETEECTOR CABLE

EP - EXISTING PROBE

ES - EXISTING UNDERGROUND SERVICE TO BE MAINTAINED BY BGE

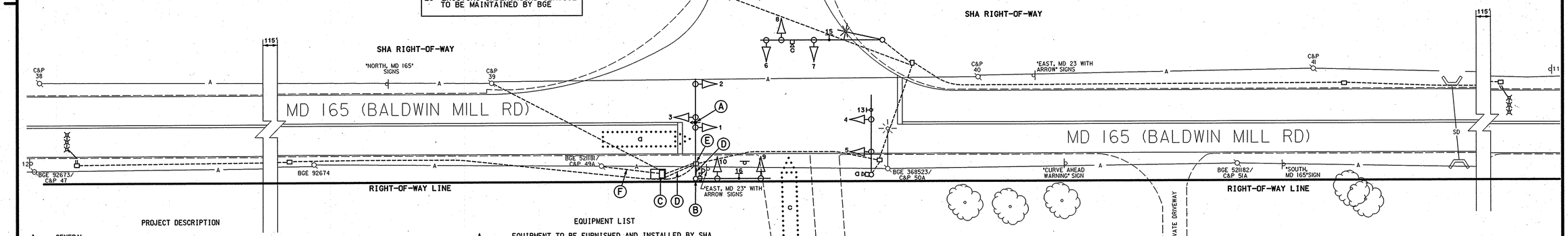

EXISTING SIGNALS

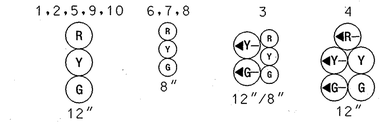

VIDEO DETECTION CAMERA (G-O)

PROPOSED OPTICOM EYE

OPTICOM DETECTOR

NEMA PHASING

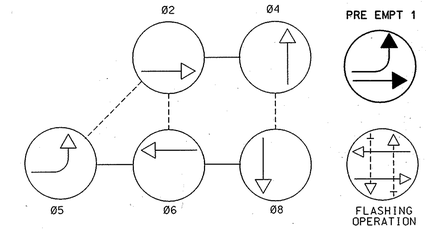

PHASING NOTES:

1.) PHASES ASSOCIATED BY A DASHED LINE WILL OPERATE CONCURRENTLY

2.) PHASES ASSOCIATED BY A SOLID LINE WILL NOT OPERATE CONCURRENTLY

PHASE CHART

	1	2	3	4	5	6	7	8	9	10
PHASE 2 & 6	G	G	G	G	G	R	R	R	R	R
2 & 6 CHANGE	Y	Y	G	G	G	R	R	R	R	R
PHASE 2 & 5	R	R	G	G	G	R	R	R	R	R
2 & 5 CHANGE	R	R	Y	Y	Y	R	R	R	R	R
PHASE 4 & 8	R	R	R	R	R	G	G	G	G	G
4 & 8 CHANGE	R	R	R	R	R	Y	Y	Y	Y	Y
PRE EMPT 1	R	R	G	G	G	R	R	R	R	R
PRE EMPT 1 CHANGE	R	R	Y	Y	Y	R	R	R	R	R
FLASHING OPERATION	FL/Y	FL/Y	FL/Y	FL/Y	FL/Y	FL/R	FL/R	FL/R	FL/R	FL/R

PROJECT DESCRIPTION

I. GENERAL

This project involves the modification of an existing Traffic Control Signal with street lighting at the intersection of MD 165 (Baldwin Mill Rd) and MD 23 (East-West Highway in Harford County. A pre emption phase for southbound MD 165 (Baldwin Mill Rd) shall be installed at this intersection. MD 165 (Baldwin Mill Rd) is assumed to run an north-south direction.

II. INTERSECTION OPERATION

1. The intersection is to operate in a NEMA five-phase, fully-actuated mode, with the MD 165 (Baldwin Mill Rd) approaches continuing to run concurrently. The Exclusive/Permissive left turn phase shall remain in operation for the southound approach of MD 165.

2. The existing full-traffic-actuated, eight-phase controller with all necessary equipment housed in a NEMA size "6" base-mounted cabinet shall be maintained at this intersection.

III. SPECIAL NOTES

1. All underground and overhead utilities shown on these plans are schematic only and may not be complete. The Contractor shall be responsible for notifying Miss Utility prior to construction so that all utilities may be located in the field. If the Contractor perceives that a conflict between the utilities and the traffic signal will occur, the Contractor shall notify the Project Engineer immediately so that the conflict may be resolved.

GENERAL NOTES:

1. A detailed utility review was not undertaken and this plan should not be construed as representing all underground utilities in the area.

EQUIPMENT LIST

A. EQUIPMENT TO BE FURNISHED AND INSTALLED BY SHA

ITEM NO.	DESCRIPTION	QUANTITY
SHOP SIGNAL	Maintenance of traffic per assignment.	1 EA
	3M Opticom #764 Discriminator	1 EA
	4-conductor opticom detector cable.	85 L.F.
	Opticom #721 detector eye.	1 EA

CONSTRUCTION DETAILS

A. Install opticom detector eye onto existing mast arm as shown.

B. Use existing signal pole.

C. Use existing base mounted cabinet and controller.

D. Use existing conduit.

E. Use existing handhole.

F. Existing underground electrical service to be maintained by BGE.

REVISION "B"

STREET TRAFFIC STUDIES, LTD.
400 Crain Hwy. NW.
Glen Burnie, MD 21061
Ph (410) 590-5500
Fax (410) 590-5507

4947.dgn D6-59

APPROVALS

TEAM LEADER

ASST. DIV.

DIVISION CHIEF

OFFICE DIRECTOR

ORIGINAL ON FILE

REVISIONS

(B) INSTALL OPTICOM DETECTOR EYE FOR SOUTHBOUND MD 165
SHA FORCES SF-SIGNAL 11/01 1/5/06
JWA 6/06
A CONVERTED EXISTING ICB TO FULL TRAFFIC CONTROL SIGNAL
NML

PLOTTED: \$DATETIME\$
FILE: \$FILE\$

GEOMETRIC LEGEND

PROPOSED
EXISTING

LEGEND OF UNDERGROUND AND OVERHEAD UTILITIES

AERIAL CABLE — A — A —
ELECTRIC — E — E —
TELEPHONE — T — T —
GAS — G — G —
SEWER — S — S —
WATER — W — W —
CABLE TV — TV — TV —

SHA

STATE OF MARYLAND
DEPARTMENT OF TRANSPORTATION
STATE HIGHWAY ADMINISTRATION

MD 165 (BALDWIN MILL ROAD) AND MD 23 (EAST-WEST HIGHWAY)

JARRETTSVILLE, MARYLAND

SCALE 1" = 20' DATE 9/17/93 CONTRACT NO.

DESIGNED BY J. WEAVER
DRAWN BY T. ZAYDEL
CHECKED BY
F.A.P. NO.

COUNTY HARFORD
LOGMILE 12002307.97
TIMS NO. H086
TOD NO.

TS NO. 3382B | DRAWING NO. | OF | SHEET NO. 2 OF 2

\\A000\S\4947\4947.dgn Jan. 05, 2006 12:38:36