MD 23 IS ASSUMED TO RUN IN A NORTH / SOUTH DIRECTION

PROPOSED SIGN

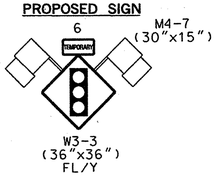

PROPOSED SIGNAL

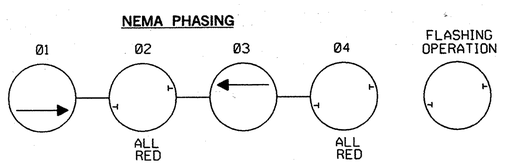

NEMA PHASING

NOTE:
PHASES ASSOCIATED BY A SOLID LINE WILL OPERATE SEQUENTIAL.

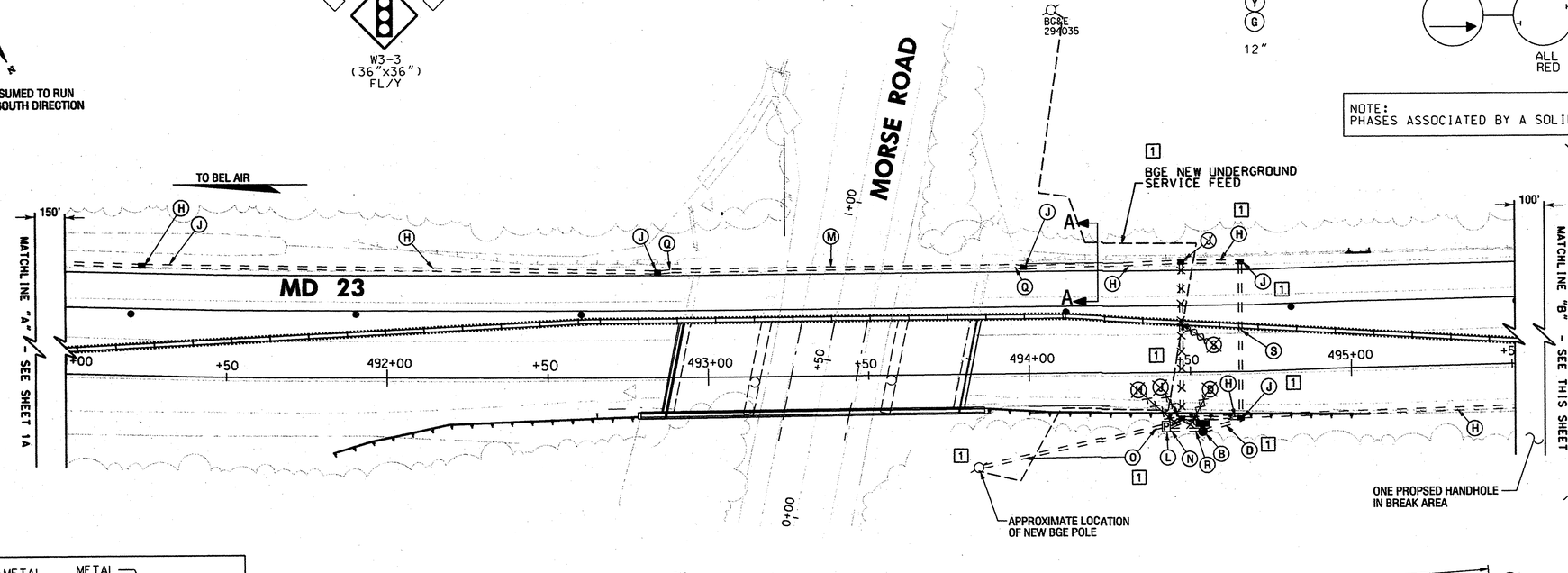

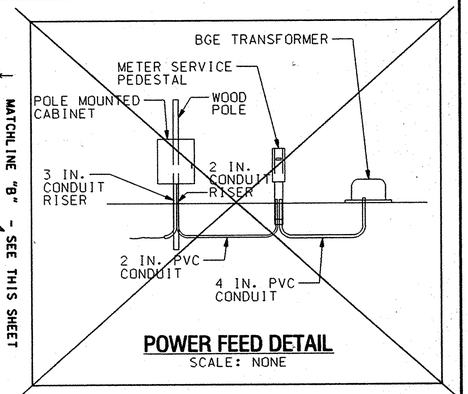

POWER FEED DETAIL
SCALE: NONE

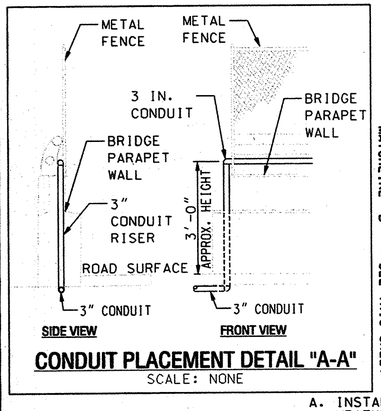

CONDUIT PLACEMENT DETAIL "A-A"
SCALE: NONE

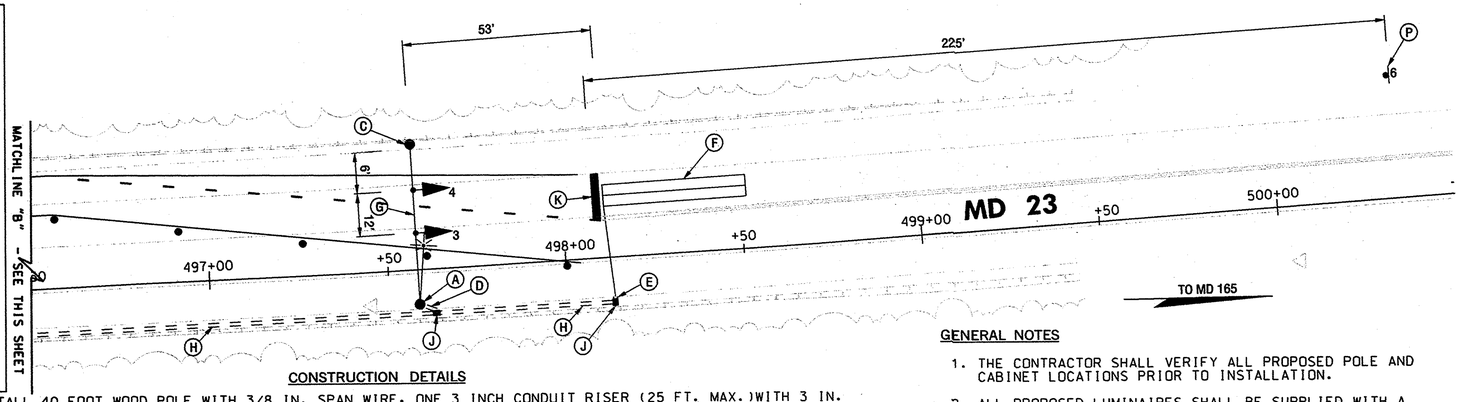

CONSTRUCTION DETAILS

A. INSTALL 40 FOOT WOOD POLE WITH 3/8 IN. SPAN WIRE. ONE 3 INCH CONDUIT RISER (25 FT. MAX.)WITH 3 IN. WEATHERHEAD. 15 FT. LIGHTING ARM AND 250 WATT HPS LUMINAIRE. STA. 497+58 10' RT.
B. INSTALL A 20 FOOT WOOD POLE WITH A NEMA SIZE 5 POLE MOUNTED CONTROLLER CABINET BAND TO THE WOOD POLE. (NOTE: ONE 2 INCH CONDUIT RISER AND ONE 3 INCH CONDUIT RISER DOWN TO GRADE). STA. 494+54. 18' RT.
C. INSTALL 40 FOOT WOOD POLE WITH 3/8 IN. SPAN WIRE. STA. 497+58 35'. LT.
D. INSTALL 3 IN. PVC SCHEDULE 80 ELECTRICAL CONDUIT - TRENCHED STUB UP TO THE BASE OF WOOD POLE.
E. INSTALL 1 IN. LIQUID TIGHT FLEXIBLE NON-METALLIC ELECTRICAL CONDUIT. (FOR DETECTOR WIRE SLEEVE)
F. INSTALL 6 FT. X 40 FT. LOOP DETECTOR ENCASED IN 1/4 IN. FLEXIBLE TUBING. (3-6-3 TURNS)
G. INSTALL 3/8 IN. SPAN WIRE TO WOOD POLE WITH LED VEHICULAR TRAFFIC SIGNAL HEADS AS SHOWN ON PLAN.
H. INSTALL 3 IN. PVC SCHEDULE 80 ELECTRICAL CONDUIT - TRENCHED.
J. INSTALL HANDHOLE.
K. INSTALL 24 IN. HEAT APPLIED. WHITE PERMANENT PREFORMED THERMOPLASTIC PAVEMENT MARKING FOR STOP LINE. STA. 498+09 FOR NORTHBOUND TRAFFIC AND STA. 488+43 FOR SOUTHBOUND TRAFFIC
L. INSTALL 200 AMP METER SERVICE PEDESTAL.
M. ATTACH 3 IN. PVC SCHEDULE 80 ELECTRICAL CONDUIT TO TOP OF BRIDGE PARAPET WALL ON THE BACKSIDE OF THE METAL FENCE AND THE INSIDE OF THE BRIDGE RAILING WITH NECESSARY HARDWARE AT 20 FT. SPACING INTERVALS.
N. LOCATE CONDUIT BEND. INSTALL 2 IN. PVC SCHEDULE 80 ELECTRICAL CONDUIT - TRENCHED.
1 O. INSTALL 4 IN. PVC SCHEDULE 80 ELECTRICAL CONDUIT - TRENCHED ~~TO TRANSFORMER.~~ STUB-UP TO BASE OF BGE UTILITY POLE.
P. INSTALL W3-3 SIGN GROUND MOUNTED ON 4 IN. X 4 IN. WOOD POST.
Q. INSTALL A 3 IN. CONDUIT BEND (STUB-UP) AT THE BASE OF THE BRIDGE PARAPET WALL. ATTACH A 3 IN. CONDUIT RISER TO THE CONDUIT BEND APPROXIMATELY 3 FT. HIGH. AT THE TOP OF THE BRIDGE WALL (AND THE CONDUIT RISER) ATTACH 3 IN. CONDUIT BEND (STUB-DOWN).
R. INSTALL 2 IN. PVC SCHEDULE 80 ELECTRICAL CONDUIT - TRENCHED STUB-UP TO BASE OF WOOD POLE.
S. INSTALL 3 IN. PVC SCHEDULE 80 ELECTRICAL CONDUIT - BORE.

GENERAL NOTES

1. THE CONTRACTOR SHALL VERIFY ALL PROPOSED POLE AND CABINET LOCATIONS PRIOR TO INSTALLATION.
2. ALL PROPOSED LUMINAIRES SHALL BE SUPPLIED WITH A PHOTOCELL.
3. THE CONTRACTOR SHALL BE RESPONSIBLE FOR TERMINATING ALL SIGNAL CABLE TO THE APPROPRIATE TERMINALS AND PROPERLY LABEL EACH CABLE.
4. THE CONTRACTOR SHALL VERIFY ALL UNDERGROUND UTILITIES PRIOR TO INSTALLING PROPOSED SIGNAL EQUIPMENT. IF ANY UTILITY CONFLICTS SHOULD ARISE THE CONTRACTOR SHALL CONTACT THE PROJECT ENGINEER.
5. ALL PROPOSE PAVEMENT MARKINGS SHALL BE INSTALLED IN ACCORDANCE WITH MSHA STANDARDS.

GEOMETRIC LEGEND

EXISTING
PROPOSED
PROPOSED GEOMETRIC WORK ZONE

UTILITY LEGEND

STORM DRAIN
GAS MAIN
WATER MAIN
SEWER MAIN
ELECTRIC CABLES
AERIAL CABLES
TELEPHONE CABLES
FIBER-OPTIC

1 REDLINE REVISION No. 1 03/ /07

SABRA, WANG & ASSOCIATES, INC.
1504 JOH AVENUE
SUITE 160
BALTIMORE, MD 21227
(410) 737-5564
WWW.SABRA-WANG.COM

APPROVALS
TEAM LEADER, TRAFFIC ENGINEERING DIVISION
ASST. CHIEF TRAFFIC ENGINEERING DIVISION
CHIEF TRAFFIC ENGINEERING DIVISION
DIRECTOR, OFFICE OF TRAFFIC & SAFETY

REVISIONS
REDLINE REVISION No. 1 03/ /07 REPLACE BGE POWER SERVICE FEED
SWA

STATE OF MARYLAND
DEPARTMENT OF TRANSPORTATION
STATE HIGHWAY ADMINISTRATION
OFFICE OF TRAFFIC & SAFETY
TRAFFIC ENGINEERING DESIGN DIVISION

REPLACEMENT OF SUPERSTRUCTURE AND REHABILITATION OF SUBSTRUCTURE FOR BRIDGE No.12064 ON MD 23 over MORSE RD
HARFORD COUNTY, MARYLAND

SIGNAL PLAN MOT PHASE 1 (SHEET 1B)

SCALE 1"=20' DATE 10/ /2006 CONTRACT NO. HA2835180

DESIGNED BY S. SMITH
DRAWN BY J. WOOD
CHECKED BY S. RENZI
FAP NO.
COUNTY HARFORD
LOGMILE
TIMS NO. 1033
TOD NO.

TS NO. DRAWING 2 OF 6 SHEET NO. 11 OF 60

PLOTTED: Thursday, March 15, 2007 AT 08:14 AM
FILE: R:\2003\23 BCS 2002-26\Brudis Bridge\Task 6\DWG\Signals\psg-p001redline.dgn

BY: SSMITH

Home use only!