MD 23 IS ASSUMED TO RUN IN A NORTH / SOUTH DIRECTION

PROPOSED SIGN

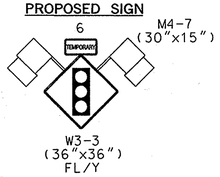

PROPOSED SIGNAL

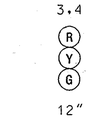

NEMA PHASING

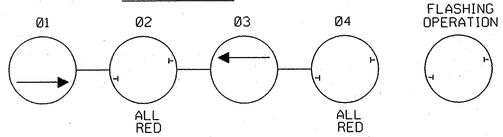

NOTE:
PHASES ASSOCIATED BY A SOLID LINE WILL OPERATE SEQUENTIAL.

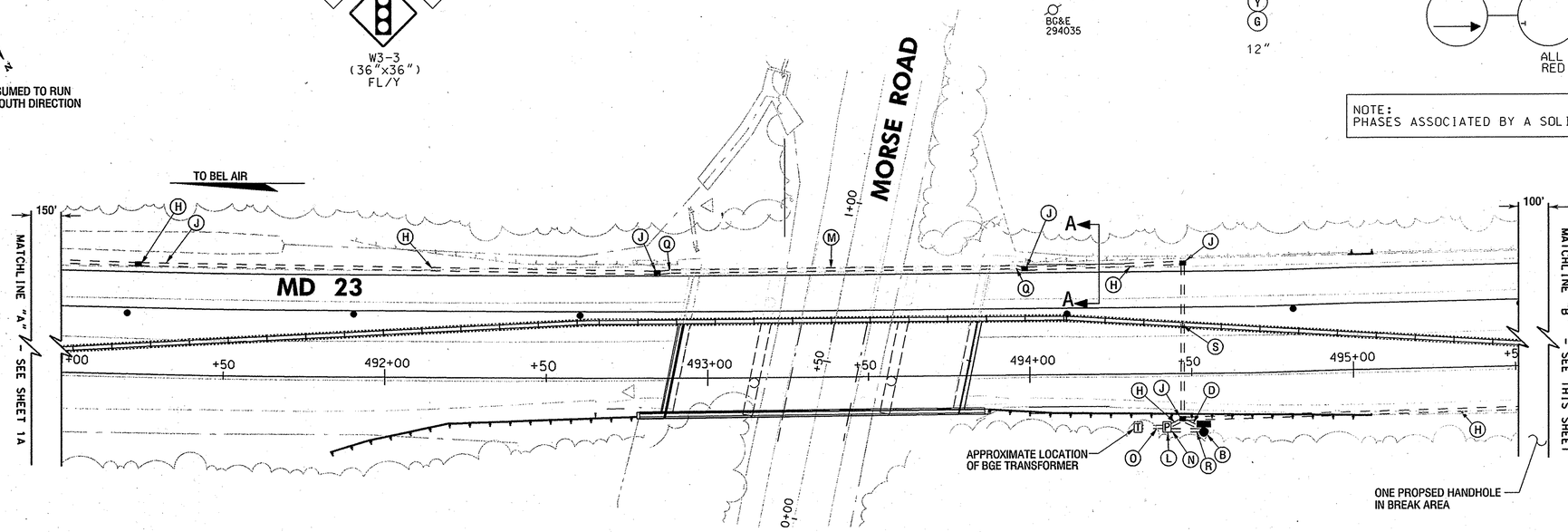

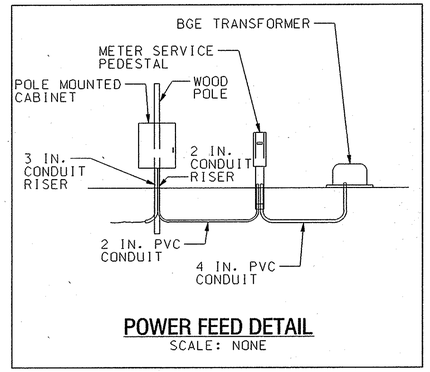

POWER FEED DETAIL
SCALE: NONE

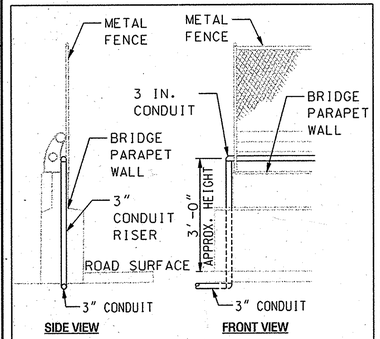

CONDUIT PLACEMENT DETAIL "A-A"
SCALE: NONE

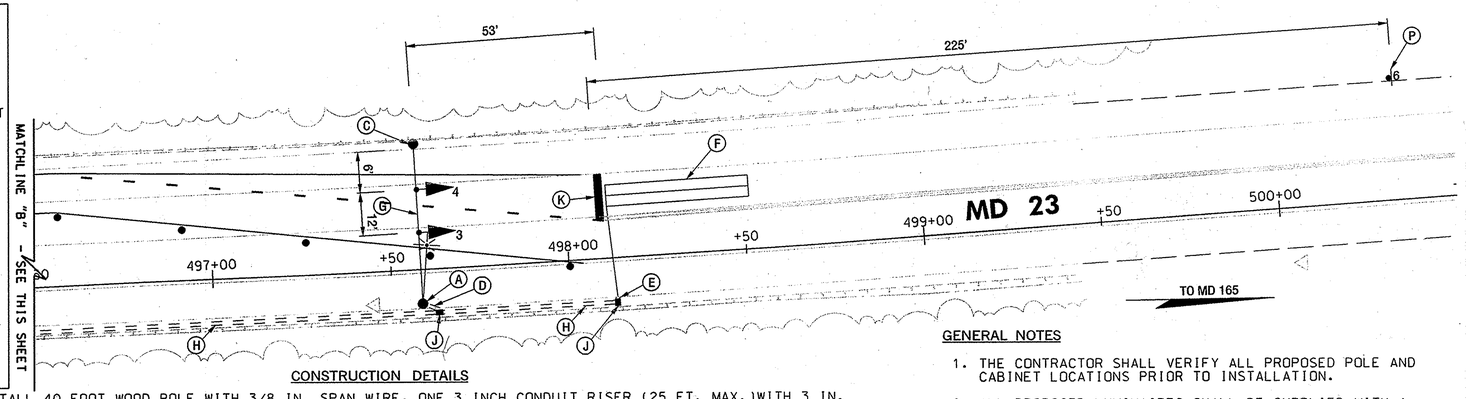

CONSTRUCTION DETAILS

A. INSTALL 40 FOOT WOOD POLE WITH 3/8 IN. SPAN WIRE, ONE 3 INCH CONDUIT RISER (25 FT. MAX.)WITH 3 IN. WEATHERHEAD, 15 FT. LIGHTING ARM AND 250 WATT HPS LUMINAIRE. STA. 497+58 10' RT.
B. INSTALL A 20 FOOT WOOD POLE WITH A NEMA SIZE 5 POLE MOUNTED CONTROLLER CABINET BAND TO THE WOOD POLE. (NOTE: ONE 2 INCH CONDUIT RISER AND ONE 3 INCH CONDUIT RISER DOWN TO GRADE). STA. 494+54, 18' RT.
C. INSTALL 40 FOOT WOOD POLE WITH 3/8 IN. SPAN WIRE. STA. 497+58 35', LT.
D. INSTALL 3 IN. PVC SCHEDULE 80 ELECTRICAL CONDUIT - TRENCHED STUB UP TO THE BASE OF WOOD POLE.
E. INSTALL 1 IN. LIQUID TIGHT FLEXIBLE NON-METALLIC ELECTRICAL CONDUIT. (FOR DETECTOR WIRE SLEEVE)
F. INSTALL 6 FT. X 40 FT. LOOP DETECTOR ENCASED IN 1/4 IN. FLEXIBLE TUBING. (3-6-3 TURNS)
G. INSTALL 3/8 IN. SPAN WIRE TO WOOD POLE WITH LED VEHICULAR TRAFFIC SIGNAL HEADS AS SHOWN ON PLAN.
H. INSTALL 3 IN. PVC SCHEDULE 80 ELECTRICAL CONDUIT - TRENCHED.
J. INSTALL HANDHOLE.
K. INSTALL 24 IN. HEAT APPLIED, WHITE PERMANENT PREFORMED THERMOPLASTIC PAVEMENT MARKING FOR STOP LINE. STA. 487+00 FOR NORTHBOUND TRAFFIC AND STA. 499+92 FOR SOUTHBOUND TRAFFIC
L. INSTALL 200 AMP METER SERVICE PEDESTAL.
M. ATTACH 3 IN. PVC SCHEDULE 80 ELECTRICAL CONDUIT TO TOP OF BRIDGE PARAPET WALL ON THE BACKSIDE OF THE METAL FENCE AND THE INSIDE OF THE BRIDGE RAILING WITH NECESSARY HARDWARE AT 20 FT. SPACING INTERVALS.
N. LOCATE CONDUIT BEND. INSTALL 2 IN. PVC SCHEDULE 80 ELECTRICAL CONDUIT - TRENCHED.
O. INSTALL 4 IN. PVC SCHEDULE 80 ELECTRICAL CONDUIT - TRENCHED TO TRANSFORMER.
P. INSTALL W3-3 SIGN GROUND MOUNTED ON 4 IN. X 4 IN. WOOD POST.
Q. INSTALL A 3 IN. CONDUIT BEND (STUB-UP) AT THE BASE OF THE BRIDGE PARAPET WALL. ATTACH A 3 IN. CONDUIT RISER TO THE CONDUIT BEND APPROXIMATELY 3 FT. HIGH, AT THE TOP OF THE BRIDGE WALL (AND THE CONDUIT RISER) ATTACH 3 IN. CONDUIT BEND (STUB-DOWN).
R. INSTALL 2 IN. PVC SCHEDULE 80 ELECTRICAL CONDUIT - TRENCHED STUB-UP TO BASE OF WOOD POLE.
S. INSTALL 3 IN. PVC SCHEDULE 80 ELECTRICAL CONDUIT - BORE.

GENERAL NOTES

1. THE CONTRACTOR SHALL VERIFY ALL PROPOSED POLE AND CABINET LOCATIONS PRIOR TO INSTALLATION.
2. ALL PROPOSED LUMINAIRES SHALL BE SUPPLIED WITH A PHOTOCELL.
3. THE CONTRACTOR SHALL BE RESPONSIBLE FOR TERMINATING ALL SIGNAL CABLE TO THE APPROPRIATE TERMINALS AND PROPERLY LABEL EACH CABLE.
4. THE CONTRACTOR SHALL VERIFY ALL UNDERGROUND UTILITIES PRIOR TO INSTALLING PROPOSED SIGNAL EQUIPMENT. IF ANY UTILITY CONFLICTS SHOULD ARISE THE CONTRACTOR SHALL CONTACT THE PROJECT ENGINEER.
5. ALL PROPOSE PAVEMENT MARKINGS SHALL BE INSTALLED IN ACCORDANCE WITH MSHA STANDARDS.

GEOMETRIC LEGEND

- EXISTING
- PROPOSED
- PROPOSED GEOMETRIC WORK ZONE

UTILITY LEGEND

- STORM DRAIN
- GAS MAIN
- WATER MAIN
- SEWER MAIN
- ELECTRIC CABLES
- AERIAL CABLES
- TELEPHONE CABLES
- FIBER-OPTIC

SABRA, WANG & ASSOCIATES, INC.
1504 JOH AVENUE
SUITE 160
BALTIMORE MD 21227
(410) 737-5564
WWW.SABRA-WANG.COM

APPROVALS	REVISIONS
TEAM LEADER, TRAFFIC ENGINEERING DIVISION	
ASST. CHIEF TRAFFIC ENGINEERING DIVISION	
CHIEF TRAFFIC ENGINEERING DIVISION	
DIRECTOR, OFFICE OF TRAFFIC & SAFETY	

STATE OF MARYLAND
DEPARTMENT OF TRANSPORTATION
STATE HIGHWAY ADMINISTRATION
OFFICE OF TRAFFIC & SAFETY
TRAFFIC ENGINEERING DESIGN DIVISION

REPLACEMENT OF SUPERSTRUCTURE AND REHABILITATION OF SUBSTRUCTURE FOR BRIDGE No.12064 ON MD 23 over MORSE RD

HARFORD COUNTY, MARYLAND

SIGNAL PLAN - MOT PHASE 1 (SHEET 1B)

SCALE 1"=20' DATE 10/2006 CONTRACT NO. HA2835180

DESIGNED BY S. SMITH COUNTY HARFORD
DRAWN BY J. WOOD LOGMILE
CHECKED BY S. RENZI TIMS NO. 1033
FAP NO. TOD NO.

TS NO. 23MOT1A | DRAWING 2 OF 6 | SHEET NO. 11 OF 60

PLOTTED: Monday, October 16, 2006 AT 01:06 PM
FILE: R:\2003\23 BCS 2002-26\Brudis Bridge\Task 5\DWG\Signals\psp-p001B.dgn

BY: SSMITH