F.H.W.A. REGION NO.	STATE	FED. AID PROJ. NO.	SHEET NO.	TOTAL SHEETS
3	MD	SEE TITLE SHEET		

WIRING DIAGRAM
MD 22 (CHURCHVILLE ROAD) AT MAITLAND ST/HICKORY AVE

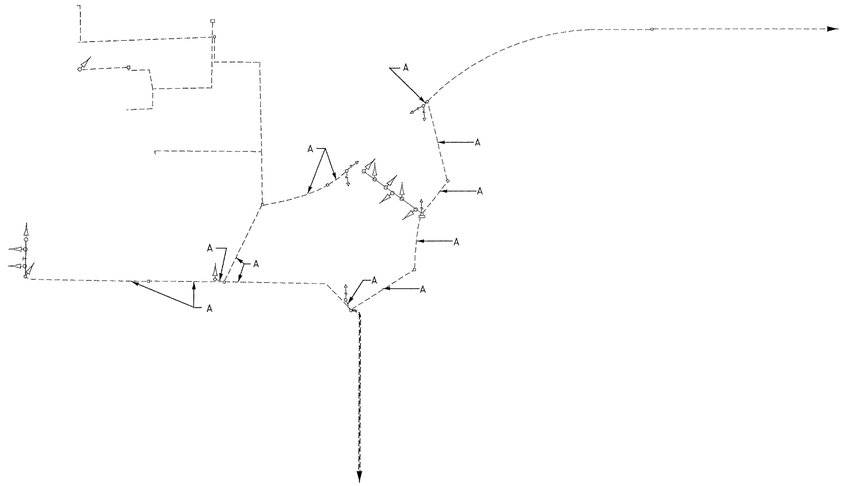

WIRING KEY

A = 1 CONDUCTOR (NO.6 AWG) STRANDED BARE COPPER GROUND WIRE
PS = POWER SERVICE

WIRING DIAGRAM
MD 22 (FULFORD AVENUE) AT MAITLAND ST

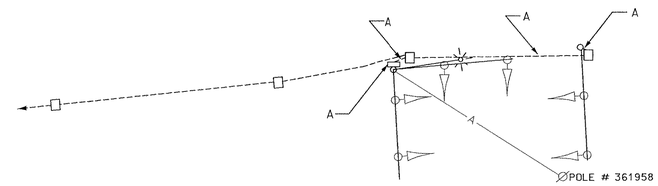

WIRING KEY

A= 1 CONDUCTOR (NO.6 AWG) STRANDED BARE COPPER GROUND WIRE
PS = POWER SERVICE

WIRING DIAGRAM
MD 924 (MAIN ST) AT PENNSYLVANIA AVE

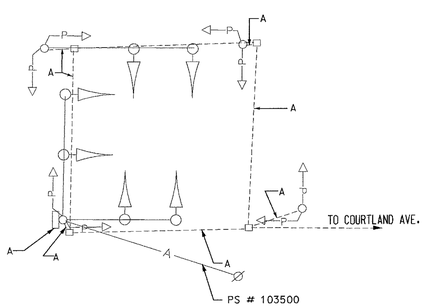

WIRING KEY

A = 1 CONDUCTOR (NO. 6 AWG) STRANDED BARE COPPER GROUND WIRE
PS = PROPOSED POWER SERVICE

WIRING DIAGRAM
MD 924 (MAIN ST) AT COURTLAND ST

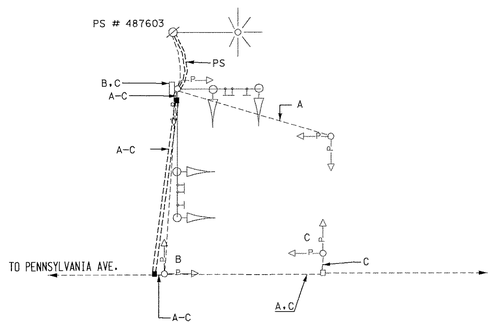

WIRING KEY

A = 1 CONDUCTOR (NO. 6 AWG) STRANDED BARE COPPER GROUND WIRE
B.C = 7 CONDUCTOR ELECTRICAL CABLE (NO. 14 AWG) FOR PEDESTRIAN SIGNAL HEADS
PS = PROPOSED POWER SERVICE

WIRING DIAGRAM
MD 924 (MAIN ST) AT MD 22 (CHURCHVILLE RD)

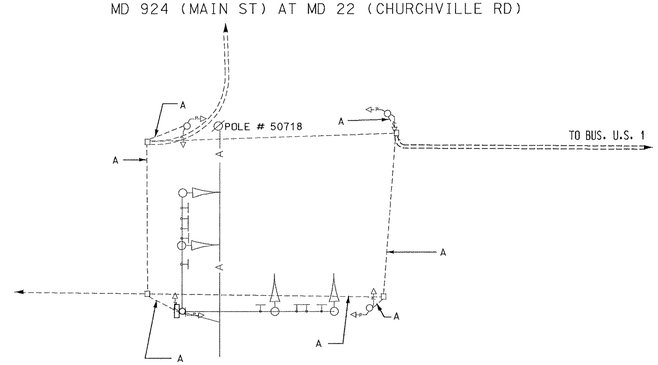

WIRING KEY

A = 1 CONDUCTOR (NO. 6 AWG) STRANDED BAR COPPER WIRE
PS = POWER SERVICE

WIRING DIAGRAM
MD 924 (MAIN ST) AT US 1 (BUS.) / MD 22 (FULFORD AVE)

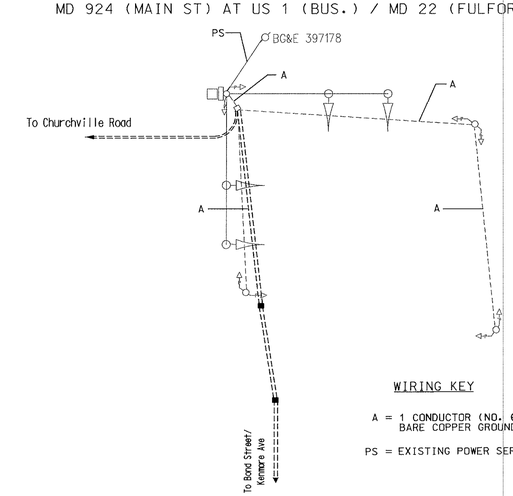

WIRING KEY

A = 1 CONDUCTOR (NO. 6 AWG) STRANDED BARE COPPER GROUND WIRE
PS = EXISTING POWER SERVICE

REVISIONS	APPROVALS
	ASST. DIVISION CHIEF, TEDD
	ASST. DISTRICT ENGINEER, TRAFFIC
	CHIEF, TRAFFIC ENGINEERING DESIGN DIVISION
	DIRECTOR, OFFICE OF TRAFFIC & SAFETY

DGL CONSULTING ENGINEERS COLUMBIA, MARYLAND

MARYLAND DOT - STATE HIGHWAY ADMINISTRATION
Office of Traffic & Safety
TRAFFIC ENGINEERING DESIGN DIVISION

GENERAL INFORMATION SHEET

LOGMILE #: 12B00102.65 DATE ___/___/___

DRAWN BY: J. ALLEN Jr.	F.A.P. NO.	PLAN SHEET NO.:	SHEET NO.
CHECK BY:	S.H.A. NO.		
SCALE: NTS	COUNTY HARFORD		___ OF ___

FILENAME=k:\PROJECTS\TRANSP\R6124B7\USRSYSTE\SW0M924.DGN