U.S. 40 AND BAUGHMANS LANE/LINDEN AVE.
SITE 1

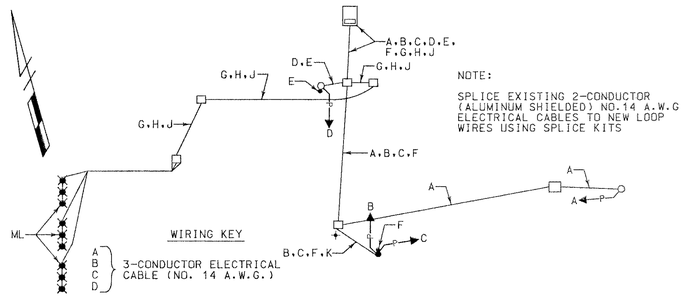

NOTE:

SPLICE EXISTING 2-CONDUCTOR (ALUMINUM SHIELDED) NO.14 A.W.G ELECTRICAL CABLES TO NEW LOOP WIRES USING SPLICE KITS

WIRING KEY

A, B, C, D — 3-CONDUCTOR ELECTRICAL CABLE (NO. 14 A.W.G.)

E, F — 2-CONDUCTOR ELECTRICAL CABLE (NO. 14 A.W.G.)

G, H, J — MICROLOOP PROBE LEAD-IN

K — STRANDED BARE COPPER GROUND WIRE (NO. 6 A.W.G.)

ML – MICROLOOP PROBE SET

+ – 3/4 IN. X 10 FT. GROUND ROD

U.S. 40 AND HILLCREST DRIVE
SITE 3

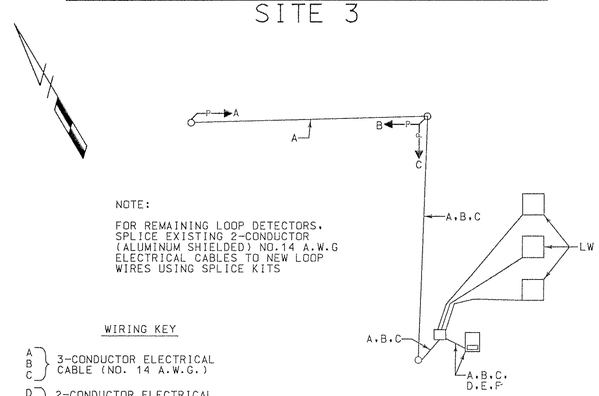

NOTE:

FOR REMAINING LOOP DETECTORS, SPLICE EXISTING 2-CONDUCTOR (ALUMINUM SHIELDED) NO.14 A.W.G ELECTRICAL CABLES TO NEW LOOP WIRES USING SPLICE KITS

WIRING KEY

A, B, C — 3-CONDUCTOR ELECTRICAL CABLE (NO. 14 A.W.G.)

D, E, F — 2-CONDUCTOR ELECTRICAL CABLE (NO. 14 A.W.G.) ALUMINUM SHIELDED

LW – LOOP WIRE (NO. 14 A.W.G.)

U.S. 40 AND McCAIN DRIVE
SITE 5

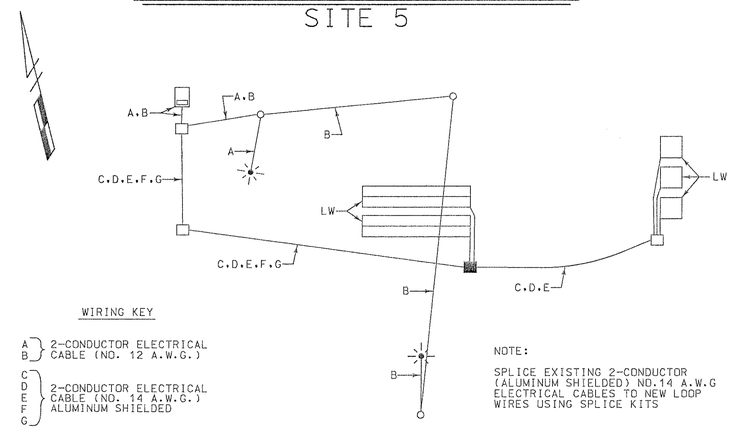

WIRING KEY

A, B — 2-CONDUCTOR ELECTRICAL CABLE (NO. 12 A.W.G.)

C, D, E, F, G — 2-CONDUCTOR ELECTRICAL CABLE (NO. 14 A.W.G.) ALUMINUM SHIELDED

LW – LOOP WIRE (NO. 14 A.W.G.)

NOTE:

SPLICE EXISTING 2-CONDUCTOR (ALUMINUM SHIELDED) NO.14 A.W.G ELECTRICAL CABLES TO NEW LOOP WIRES USING SPLICE KITS

U.S. 40 AND HOKE PLACE
SITE 2

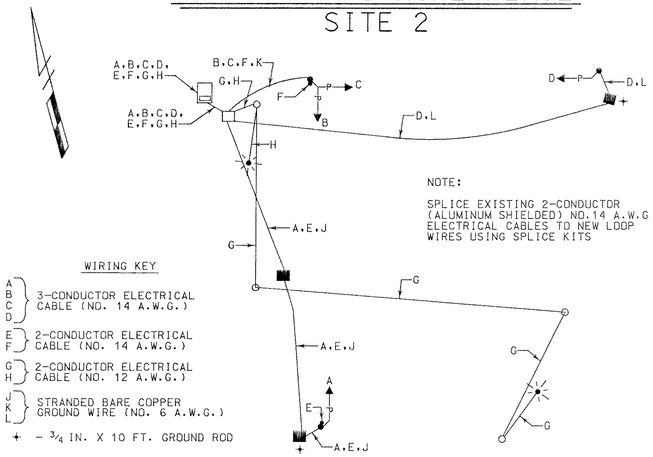

NOTE:

SPLICE EXISTING 2-CONDUCTOR (ALUMINUM SHIELDED) NO.14 A.W.G ELECTRICAL CABLES TO NEW LOOP WIRES USING SPLICE KITS

WIRING KEY

A, B, C, D — 3-CONDUCTOR ELECTRICAL CABLE (NO. 14 A.W.G.)

E, F — 2-CONDUCTOR ELECTRICAL CABLE (NO. 14 A.W.G.)

G, H — 2-CONDUCTOR ELECTRICAL CABLE (NO. 12 A.W.G.)

J, K, L — STRANDED BARE COPPER GROUND WIRE (NO. 6 A.W.G.)

+ – 3/4 IN. X 10 FT. GROUND ROD

U.S. 40 AND WILLOWDALE DRIVE
SITE 4

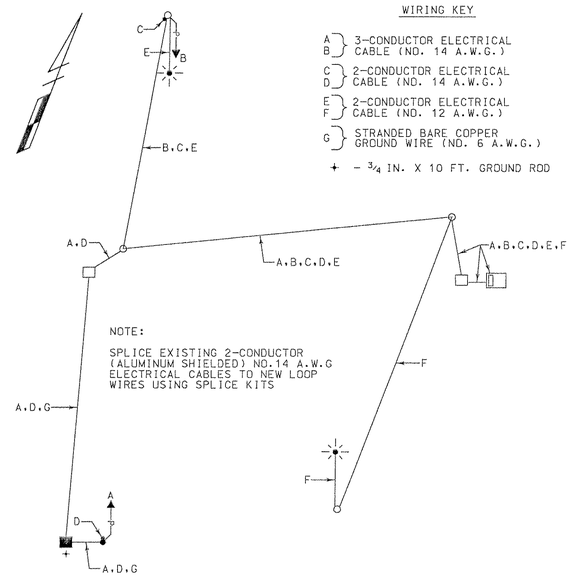

WIRING KEY

A, B — 3-CONDUCTOR ELECTRICAL CABLE (NO. 14 A.W.G.)

C, D — 2-CONDUCTOR ELECTRICAL CABLE (NO. 14 A.W.G.)

E, F — 2-CONDUCTOR ELECTRICAL CABLE (NO. 12 A.W.G.)

G — STRANDED BARE COPPER GROUND WIRE (NO. 6 A.W.G.)

+ – 3/4 IN. X 10 FT. GROUND RD

NOTE:

SPLICE EXISTING 2-CONDUCTOR (ALUMINUM SHIELDED) NO.14 A.W.G ELECTRICAL CABLES TO NEW LOOP WIRES USING SPLICE KITS

U.S. 40 AND GROVE HILL ROAD
SITE 6

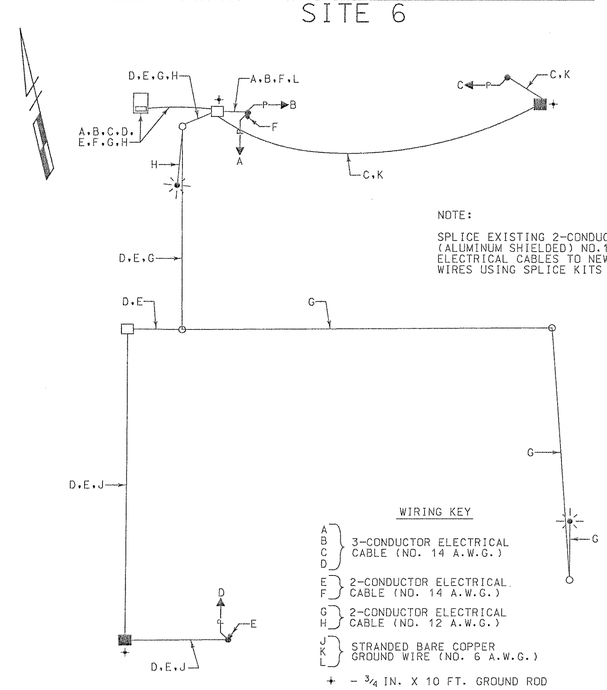

NOTE:

SPLICE EXISTING 2-CONDUCTOR (ALUMINUM SHIELDED) NO.14 A.W.G ELECTRICAL CABLES TO NEW LOOP WIRES USING SPLICE KITS

WIRING KEY

A, B, C, D — 3-CONDUCTOR ELECTRICAL CABLE (NO. 14 A.W.G.)

E, F — 2-CONDUCTOR ELECTRICAL CABLE (NO. 14 A.W.G.)

G, H — 2-CONDUCTOR ELECTRICAL CABLE (NO. 12 A.W.G.)

J, K, L — STRANDED BARE COPPER GROUND WIRE (NO. 6 A.W.G.)

+ – 3/4 IN. X 10 FT. GROUND ROD

U.S. 40 AND WAVERLY DRIVE
SITE 7

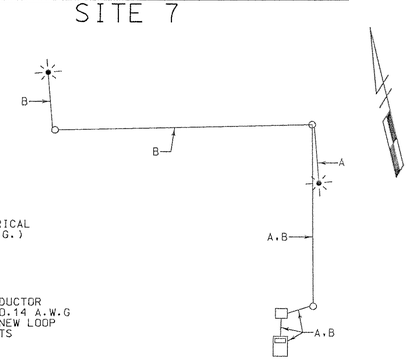

WIRING KEY

A, B — 2-CONDUCTOR ELECTRICAL CABLE (NO. 12 A.W.G.)

NOTE:

SPLICE EXISTING 2-CONDUCTOR (ALUMINUM SHIELDED) NO.14 A.W.G ELECTRICAL CABLES TO NEW LOOP WIRES USING SPLICE KITS

REVISIONS	APPROVALS
	ASST. TRAFFIC ENGINEERING DESIGN DIVISION
	ASST. DISTRICT ENGINEER, TRAFFIC
	CHIEF, TRAFFIC ENGINEERING DESIGN DIVISION
	DIRECTOR, TRAFFIC & SAFETY

WR&A
Whitman, Requardt and Associates, LLP
2315 Saint Paul Street
Baltimore, Maryland 21218
(410) 235-3450

MARYLAND DOT - STATE HIGHWAY ADMINISTRATION
Office of Traffic & Safety

TRAFFIC ENGINEERING DESIGN DIVISION
WIRING DIAGRAMS
U.S. 40 FROM WAVERLY DRIVE TO THE EAST OF U.S. 15

DRAWN BY:	S.BLOSS	F.A.P. NO.		TS NO. TS-3937G11	SHEET NO.
CHECKED BY:	N.LEARY	S.H.A. NO.	FR3315171		
SCALE:	NONE	COUNTY:	FREDERICK	T.I.M.S. NO.	6 OF 7
DATE:	9-10-99	LOG MILE:			

M:\96011\3\2680II.DGN