WIRING DIAGRAMS

MD 85 & GUILFORD DRIVE

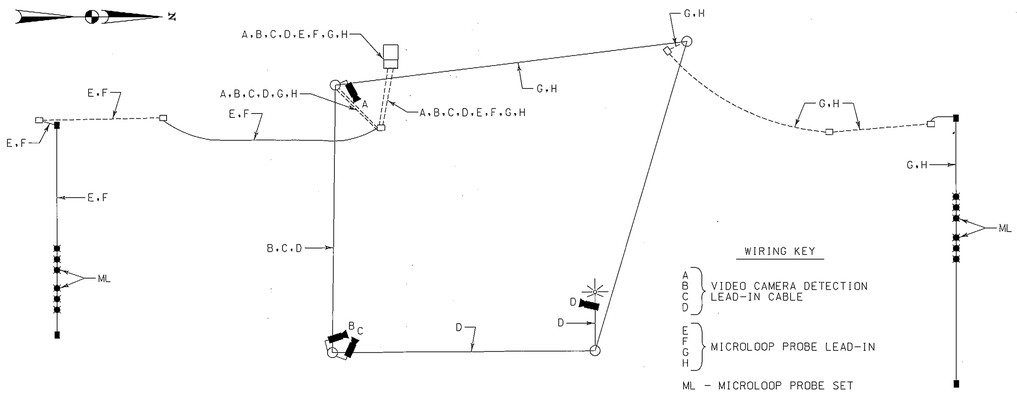

MD 85 & GROVE ROAD

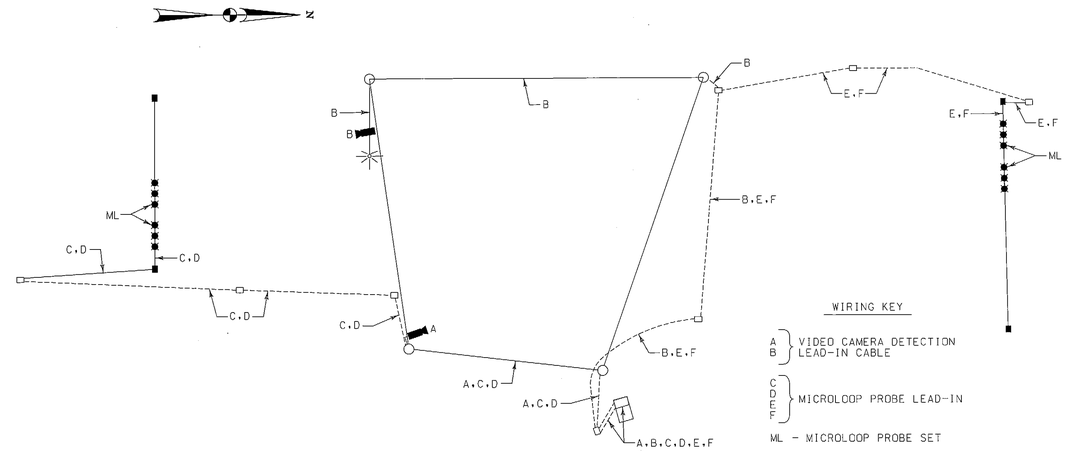

MD 85 & LOWES ENTRANCE

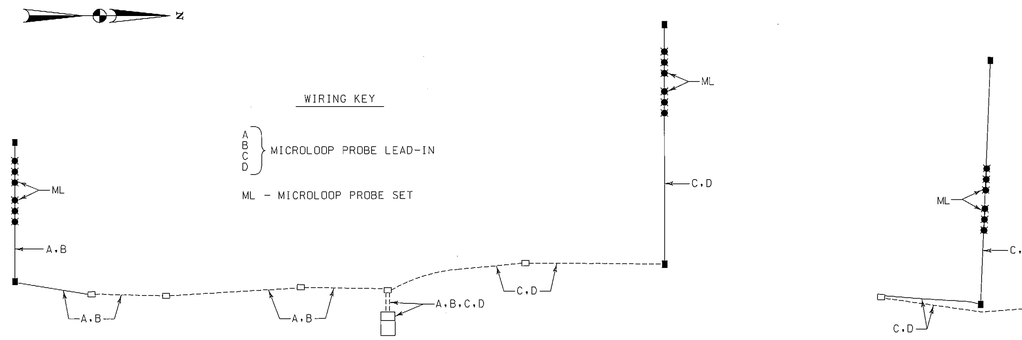

MD 85 & SPECTRUM DRIVE

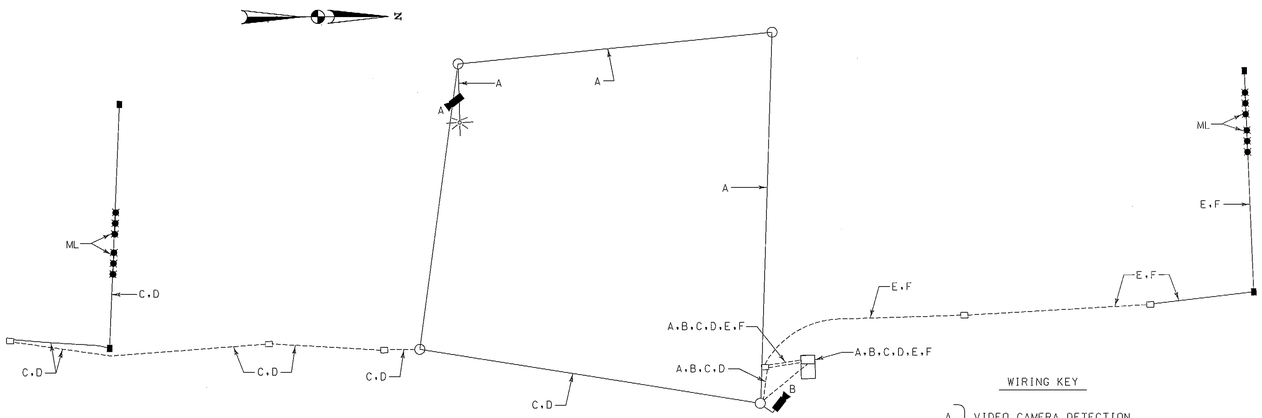

MD 85 & I 270 NB

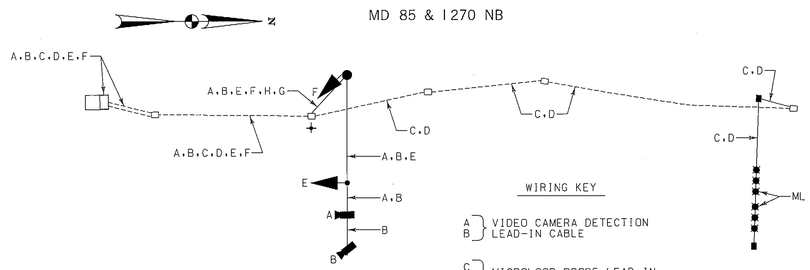

MD 85 & I 270 SB

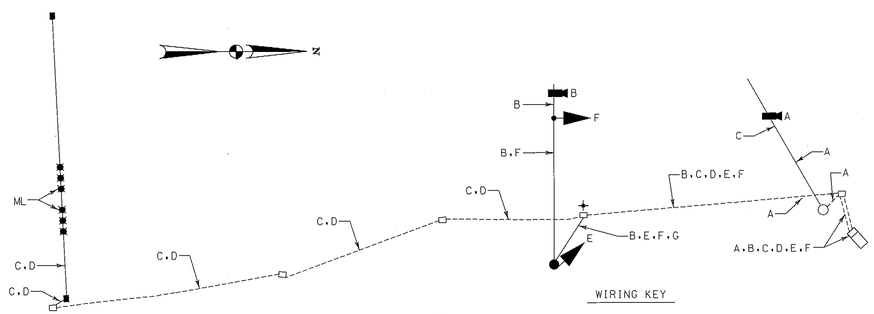

TOD NO: XX650-14
SHA NO: FR122B51
MD 85 @ Various Locations

WHITMAN, REQUARDT & ASSOCIATES, LLP
801 South Caroline Street, Baltimore, Maryland 21231

BY: sbloss

STATE OF MARYLAND
DEPARTMENT OF TRANSPORTATION
STATE HIGHWAY ADMINISTRATION
OFFICE OF TRAFFIC & SAFETY
TRAFFIC ENGINEERING DESIGN DIVISION

MD 85 Traffic Signals

Frederick, Maryland

GENERAL INFORMATION SHEET

SCALE NONE DATE 3/28/2012 CONTRACT NO. XX6505185

DESIGNED BY S. Bloss
DRAWN BY S. Bloss
CHECKED BY N. Leary
F.A.P. NO.
COUNTY Frederick
LOGMILE
TIMS NO. L375
TOD NO.

TS NO. | DRAWING TSP-7 OF 8 | SHEET NO. 7 OF 8

PLOTTED: March 29, 2012
FILE: N:\31669-215\CADD\psG-N007_L375.dgn