PHASE CHART

	1	2	3	4	5	6	7	8	9	10	11	12	13	14	15	16	17	18
PHASE 1 + 5	←G—	←G—	R	R	←G—	←G—	R	R	R	R	R	R	R	R	R	R	R	R
1 + 5 CHANGE	PHASE 1 + 5 MAY CHANGE TO PHASE 1 + 6, PHASE 2 + 5 OR PHASE 2 + 6																	
PHASE 1 + 6	←R—	←R—	R	R	←G—	←G—	G	G	R	R	R	R	R	R	R	R	R	R
1 + 6 CHANGE	←R—	←R—	R	R	←Y—	←Y—	G	G	R	R	R	R	R	R	R	R	R	R
PHASE 2 + 5	←G—	←G—	G	G	←R—	←R—	R	R	R	R	R	R	R	R	R	R	R	R
2 + 5 CHANGE	←Y—	←Y—	G	G	←R—	←R—	R	R	R	R	R	R	R	R	R	R	R	R
PHASE 2 + 6	←R—	←R—	G	G	←R—	←R—	G	G	R	R	R	R	R	R	R	R	R	R
2 + 6 CHANGE	←R—	←R—	Y	Y	←R—	←R—	Y	Y	R	R	R	R	R	R	R	R	R	R
PHASE 4 + 8	←R—	←R—	R	R	←R—	←R—	R	R	R	R	G	G	R	R	G	G	G	G
4 + 8 CHANGE	←R—	←R—	R	R	←R—	←R—	R	R	R	R	Y	Y	R	R	Y	Y	Y	Y
FLASHING OPERATION	←FL/R—	←FL/R—	FL/Y	FL/Y	←FL/R—	←FL/R—	FL/Y	FL/Y	FL/R	FL/R	FL/R	FL/R	FL/R	FL/R	FL/R	FL/R	FL/R	FL/R

WIRING DIAGRAM

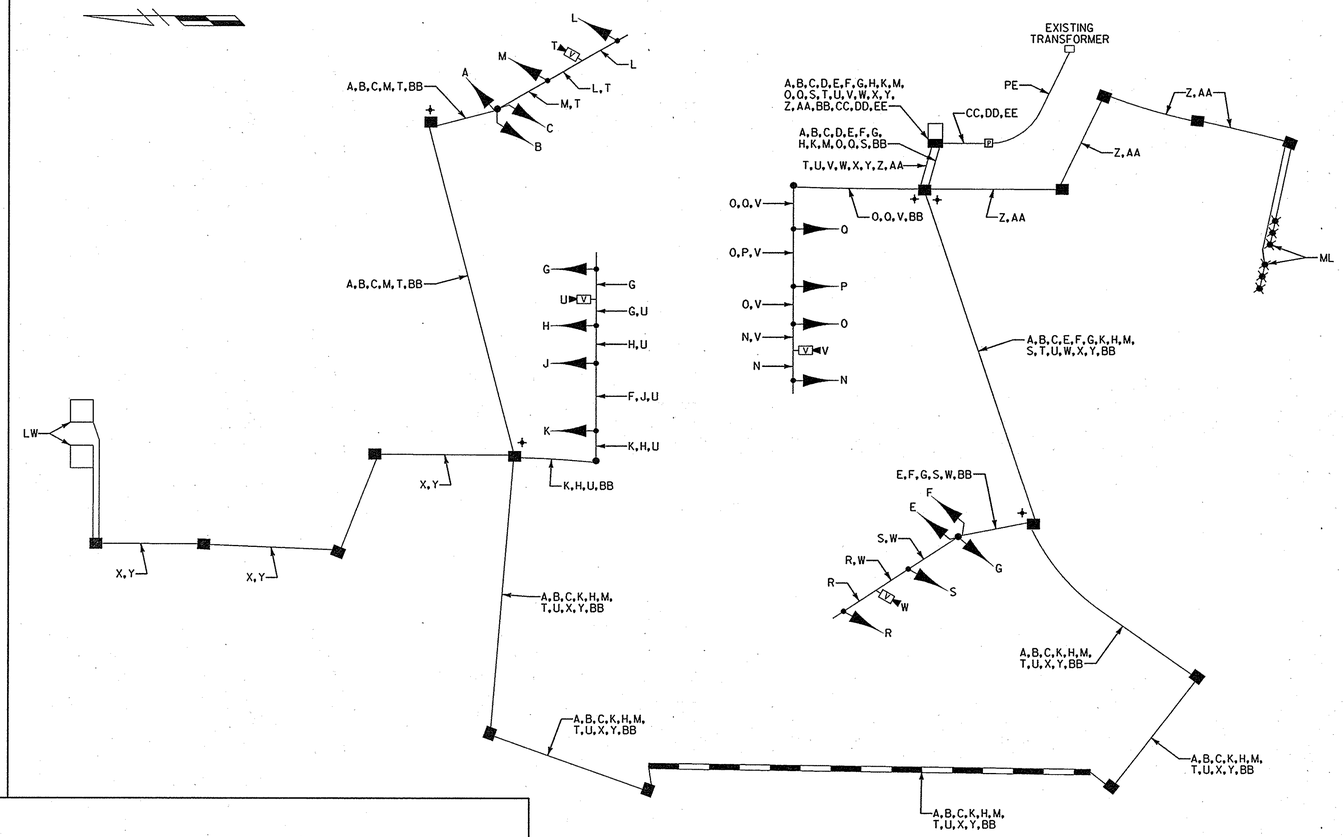

SIGN DETAILS

C-1 C-2

PANEL NO.	QUANTITY	AREA (SQ.FT.)	WIDTH	HEIGHT	COLOR LEG.	COLOR BKGD	BORDER WIDTH	BORDER RADIUS	ARROW	SHIELD
C-1	1	28	7'-0"	4'-0"	W	G	2"	6"	AI @ 225°	MI-1 (24" x 24")
	REMARKS: SHEET ALUMINUM									
C-2	1	28	7'-0"	4'-0"	W	G	2"	6"	AI @ 225°	MI-1 (24" x 24")
	REMARKS: SHEET ALUMINUM									

BLK=BLACK; BLU=BLUE; BRO=BROWN; G=GREEN; OR=ORANGE; R=RED; W=WHITE; Y=YELLOW

15 FT. MAST ARM ATTACHMENT DETAIL

NOT TO SCALE

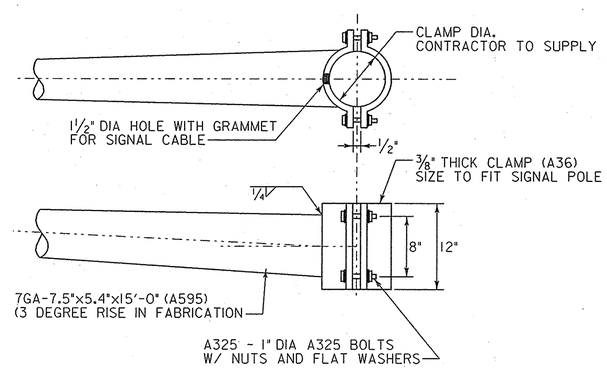

NOTE: ALL STEEL SHALL BE HOT DIPPED GALVANIZED

WIRING KEY

- A B C D E F G H J K L M N O P Q R S — 5-CONDUCTOR ELECTRICAL CABLE (NO. 14 A.W.G.)
- T U V W — VIDEO CAMERA DETECTION LEAD-IN CABLE
- Z AA — MICROLOOP PROBE LEAD-IN
- X Y — 2-CONDUCTOR ELECTRICAL CABLE ALUMINUM SHIELDED (NO. 14 A.W.G.)
- BB — STRANDED BARE COPPER GROUND WIRE (NO. 6 A.W.G.)
- CC DD EE — 1-CONDUCTOR ELECTRICAL CABLE (NO. 4 A.W.G.)
- ML - MICROLOOP PROBE SET
- LW - LOOP WIRE (NO. 14 A.W.G.)
- PE - PROPOSED UNDERGROUND ELECTRICAL SERVICE
- + - ¾ IN. X 10 FT. GROUND ROD

TSP-18

WR&A
Whitman, Requardt and Associates, LLP
801 South Caroline Street
Baltimore, Maryland 21231
(410) 235-3450

MARYLAND DOT - STATE HIGHWAY ADMINISTRATION
Office of Traffic & Safety
TRAFFIC ENGINEERING DESIGN DIVISION
GENERAL INFORMATION SHEET
MD 355 AND I-70 RAMPS

DRAWN BY: S. BLOSS	F.A.P. NO.		TS NO.		SHEET NO.
CHECKED BY: N. LEARY	S.H.A. NO.	FR4265172			
SCALE: NONE	COUNTY:	FREDERICK	T.I.M.S. NO. G813		OF
DATE: 4/20/2005	LOG MILE:				

m:\3l293\tspl8md355.plf