FINGERBOARD ROAD IS ASSUMED TO RUN IN AN EAST-WEST DIRECTION

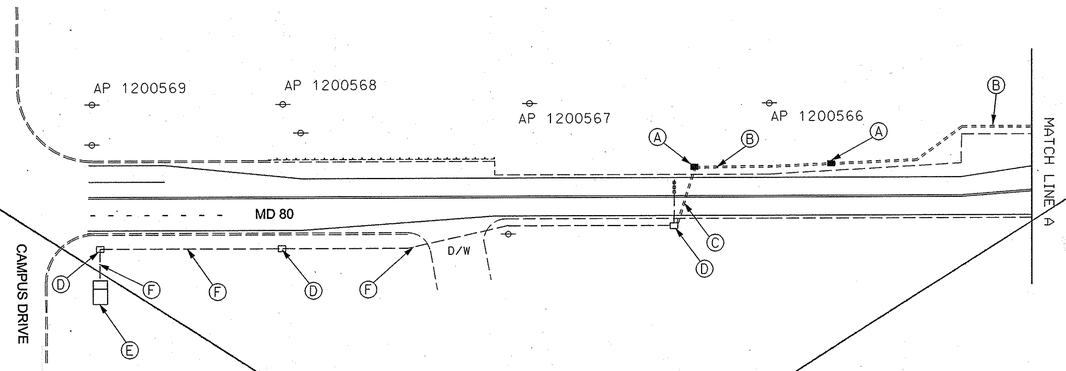


## EQUIPMENT LISTS

B. EQUIPMENT TO BE FURNISHED AND/OR INSTALLED BY THE CONTRACTOR.

| ITEM | QUANTITY | DESCRIPTION |
|---|---|---|
| 8037 | 40 LF | F&I 3" SCHEDULE 80 RIGID PVC CONDUIT - BORED |
| 8040 | 700 LF | F&I 3" SCHEDULE 80 RIGID PVC CONDUIT - TRENCHED |
| 8054 | 4 EA | F&I ELECTRICAL HANDHOLE |
| 8070 | 1700 LF | F&I 12-PAIR COMMUNICATION CABLE, JELLYFILLED (UNDERGROUND) |

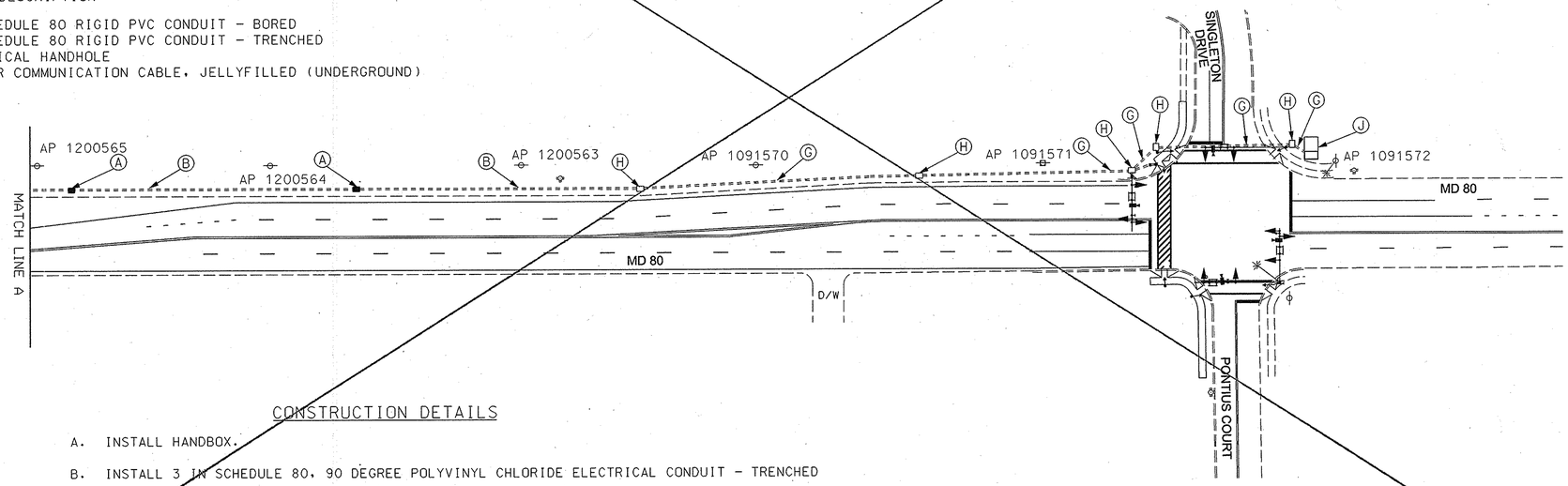


## CONSTRUCTION DETAILS

A. INSTALL HANDBOX.

B. INSTALL 3 IN SCHEDULE 80, 90 DEGREE POLYVINYL CHLORIDE ELECTRICAL CONDUIT - TRENCHED

C. INSTALL 3 IN SCHEDULE 80, 90 DEGREE POLYVINYL CHLORIDE ELECTRICAL CONDUIT - BORED

D. USE EXISTING HANDBOX.

E. USE EXISTING CABINET.

F. USE EXISTING CONDUIT.

G. CONDUIT FOR PROPOSED MD 80 & SINGLETON DRIVE/ PONTIUS COURT TRAFFIC SIGNAL.

H. HANDBOX FOR PROPOSED MD 80 & SINGLETON DRIVE/ PONTIUS COURT TRAFFIC SIGNAL.

J. CABINET FOR PROPOSED MD 80 & SINGLETON DRIVE/ PONTIUS COURT TRAFFIC SIGNAL.


BAI BRUDIS & ASSOCIATES, INC.
CONSULTING ENGINEERS
9220 RUMSEY ROAD; SUITE 110
COLUMBIA, MARYLAND 21045
(410)-884-3607


| APPROVALS | REVISIONS |
|---|---|
| TEAM LEADER | 1 REVISION #1 1/5/06 RELOCATE CABINET, PEDESTAL POLE / ADD APS SIGNALS — CJP — 2/1/06 |
| ASST. DIV. CHIEF | |
| DIVISION CHIEF | |
| OFFICE DIRECTOR | |

SURVEY BOOK NO.

PLOTTED: $DATE$
FILE: $FILE$

STATE OF MARYLAND
DEPARTMENT OF TRANSPORTATION
STATE HIGHWAY ADMINISTRATION
TRAFFIC ENGINEERING DESIGN DIVISION
OFFICE OF TRAFFIC & SAFETY

# MD 80 (FINGERBOARD ROAD) FROM SINGLETON DRIVE TO CAMPUS DRIVE

## INTERCONNECT PLAN

IC-01

SCALE 1" = 50' DATE 2/25/05 CONTRACT NO.

DESIGNED BY KMM TS NO. 4383
DRAWN BY KMM T.I.M.S. NO. G795
CHECKED BY CJP F.A.P. NO. 10008006.23
FREDERICK

3 3 SHEET NO. 3 OF 3

INDEXED

BY: $USERNAME$