NORTHBOUND MD 75 APPROACHING ST. PETERS CHURCH

MD 75 IS ASSUMED TO RUN
IN A NORTH-SOUTH DIRECTION

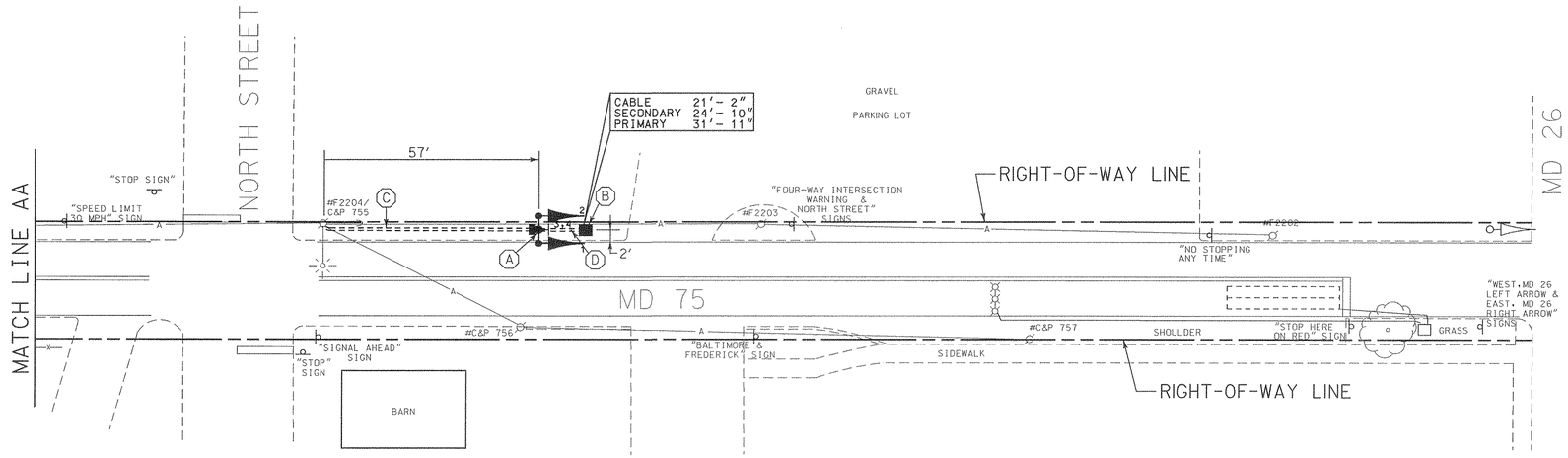

SIGNAL HEADS

1, 2

Y

8"

SIGNS

3

W11-2 (FYG/B)
(30" X 30")

4

375 FT.

(36" X 12")
(FYG/B)

SIGN DETAIL

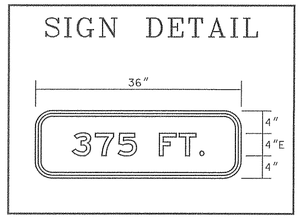

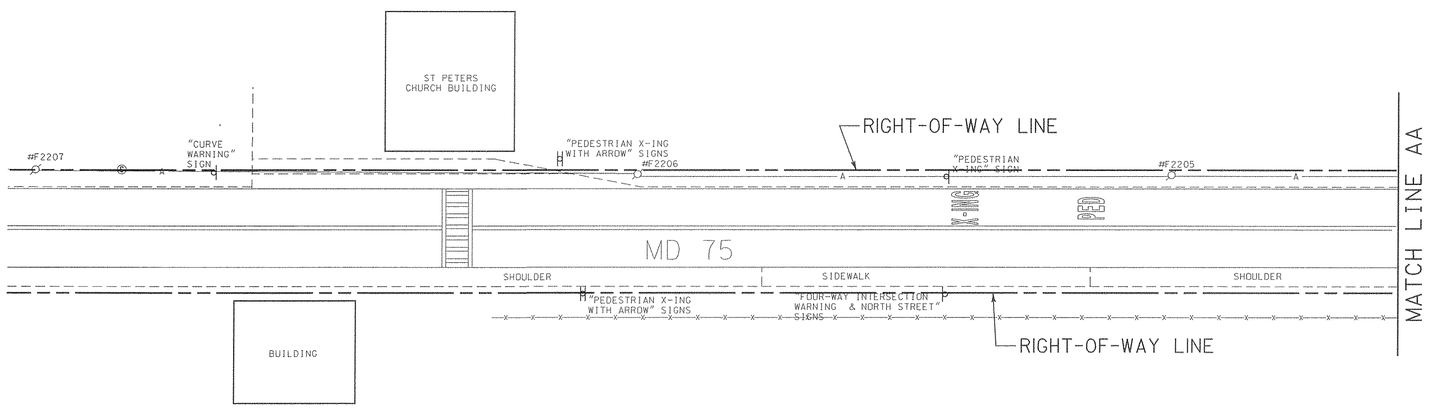

INSTALLATION DETAIL

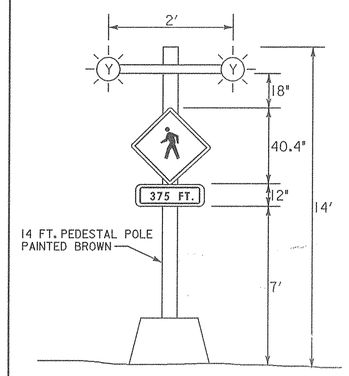

CONSTRUCTION DETAILS

A. INSTALL 14 FT. BREAKAWAY PEDESTAL POLE, SIGNAL HEADS, SIGNS, POLE-MOUNTED CABINET AND CONTROLLER, PHOTOCELL, CONTROL AND DISTRIBUTION EQUIPMENT AND 3 FT. X 4 FT. X 4 IN. CONCRETE PAD. (INSTALL 2-2 IN. SCHEDULE 80, 90 DEGREE POLYVINYL CHLORIDE ELECTRICAL CONDUIT BENDS IN PEDESTAL BASE).
B. INSTALL HANDHOLE.
C. INSTALL 3 IN. SCHEDULE 80, RIGID POLYVINYL CHLORIDE ELECTRICAL CONDUIT FOR PROPOSED UNDERGROUND ELECTRICAL SERVICE AND 2 IN. SCHEDULE 80, RIGID POLYVINYL CHLORIDE ELECTRICAL CONDUIT FOR PROPOSED UNDERGROUND TELEPHONE SERVICE IN COMMON TRENCH. CAP AND MARK CONDUITS AT POLE BASE FOR USE BY OTHERS.
D. INSTALL 2 IN. SCHEDULE 80 RIGID POLYVINYL CHLORIDE ELECTRICAL CONDUIT (TRENCHED).

GENERAL NOTES

1. ALL UNDERGROUND AND OVERHEAD UTILITIES SHOWN ON THESE PLANS ARE SCHEMATIC ONLY AND MAY NOT BE COMPLETE. THE CONTRACTOR SHALL BE RESPONSIBLE FOR NOTIFYING MISS UTILITY PRIOR TO THE CONSTRUCTION SO THAT ALL UTILITIES MAY BE LOCATED IN THE FIELD. IF THE CONTRACTOR PERCEIVES THAT A CONFLICT BETWEEN UTILITIES AND THE TRAFFIC SIGNAL WILL OCCUR, THE CONTRACTOR SHALL NOTIFY THE PROJECT ENGINEER IMMEDIATELY SO THAT THE CONFLICT MAY BE RESOLVED.

SPECIAL NOTE

THE PEDESTAL POLE, BREAKAWAY BASE, CABINET AND ANY EXPOSED ANCHOR BOLTS, NUTS, WASHERS, STAINLESS STEEL BANDS AND CONDUITS SHALL BE PAINTED BROWN.

LEGEND OF UNDERGROUND AND OVERHEAD UTILITIES

AERIAL CABLE	A
ELECTRICAL	E
TELEPHONE	T
GAS	G
SEWER	S
STORM DRAIN	SD
WATER	W
CABLE TV	TV

WR&A
Whitman, Requardt and Associates, LLP
2315 Saint Paul Street
Baltimore, Maryland 21218
(410) 235-3450

REVISIONS	APPROVALS
	ASST. TRAFFIC ENGINEERING DESIGN DIVISION 4/26/00
	ASST. DISTRICT ENGINEER, TRAFFIC 4/26/00
	CHIEF, TRAFFIC ENGINEERING DESIGN DIVISION
	DIRECTOR, TRAFFIC & SAFETY per 4-2-00

MARYLAND DOT - STATE HIGHWAY ADMINISTRATION
Office of Traffic & Safety
TRAFFIC ENGINEERING DESIGN DIVISION
TRAFFIC SIGNALIZATION PLAN
MD 75 AND ST. PETERS CHURCH
PEDESTRIAN HAZARD IDENTIFICATION BEACON

DRAWN BY:	S. CHERNACK	F.A.P. NO.		TS NO.	
CHECKED BY:	N.LEARY	S.H.A. NO.	F.R360A57/857	3795	SHEET NO.
SCALE:	1" = 20'	COUNTY:	FREDERICK	T.I.M.S. NO.	
DATE:	3/15/00	LOG MILE:	10.075-0.065	D646	1 OF 2