MD 16 IS ASSUMED TO RUN IN A NORTH SOUTH DIRECTION

SIGNS

6.8 — R10-6, 24"x36"

5.7 — W3-3, 36"x36"

INSTALLED THRU MOT PLANS

PROPOSED SIGNALS

1-4

R Y G

12"

PHASING OPERATON

Ø1 Ø2 Ø3 Ø4

CLEARANCE CLEARANCE

FLASHING OPERATION

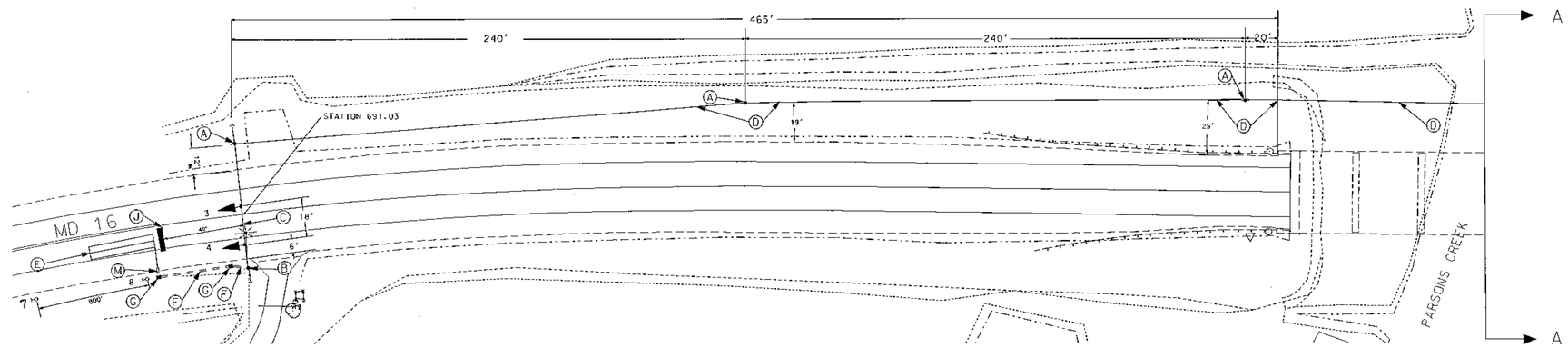

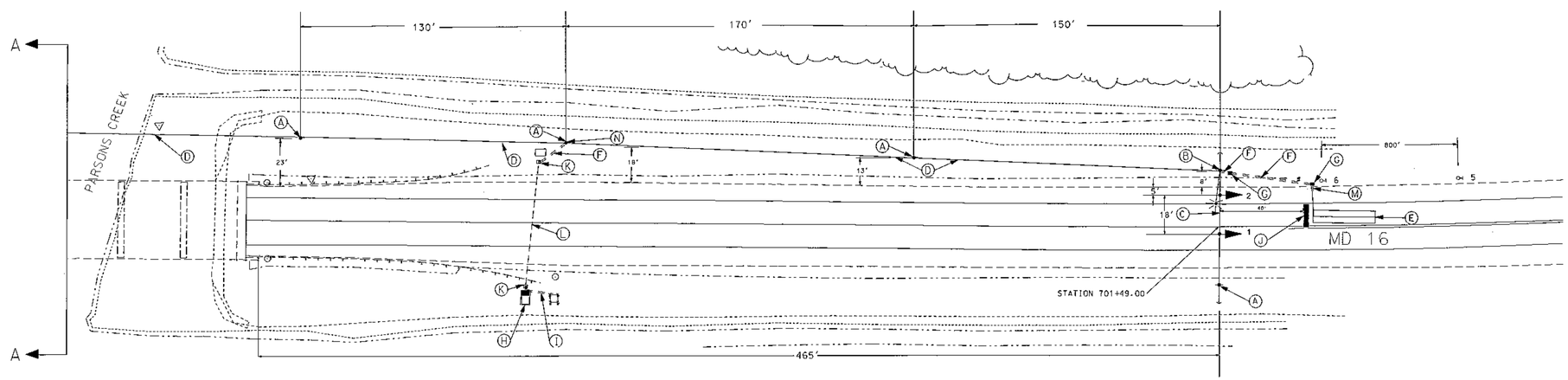

CONSTRUCTION DETAILS

A. INSTALL 50 FOOT CLASS II WOOD POLE (WITH BACK GUY IF SHOWN)
B. INSTALL 50 FOOT CLASS II WOOD POLE WITH 2 INCH PVC RISER 15' LUMINAIRE ARM AND 250 WATT HPS LUMINAIRE
C. INSTALL 3/8" STEEL SPAN WIRE AND SIGNAL HEADS WITH 1/4" STEEL TETHER SPAN AS SHOWN
D. INSTALL 3/8" STEEL SPAN WITH MESSANGER RINGS
E. INSTALL 6' X 30' LOOP DETECTOR
F. INSTALL 2" PVC CONDUIT TRENCHED
G. INSTALL HANDBOX
H. INSTALL NEMA SIZE 6 BASE MOUNTED CABINET ON EXISTING BASE
I. INSTALL 3" PVC CONDUIT FOR POWER FEED
J. INSTALL 24" HEAT APPLIED THERMOPLASTIC PAVEMENT MARKING (STOP LINE)
K. USE EXISTING HANDBOX
L. USE EXISTING CONDUIT
M. INSTALL 1" LIQUID TIGHT NON-METALIC DETECTOR SLEEVE
N. INSTALL 2 INCH PVC RISER ON WOOD POLE

GENERAL NOTES

1. ONCE THIS PROJECT IS COMPLETED THE CONTRACTOR SHALL BE RESPONSIBLE FOR THE REMOVAL AND DISPOSAL OF ALL SIGNAL EQUIPMENT

REVISIONS	APPROVALS
A INSTALL TEMPORARY SIGNAL FOR BRIDGE RECONSTRUCTION DO 5705180 JUNE 2003	TEAM LEADER, TRAFFIC ENGINEERING DESIGN DIVISION
	ASST. CHIEF TRAFFIC ENGINEERING DESIGN DIVISION
	CHIEF, TRAFFIC ENGINEERING DESIGN DIVISION
	DIRECTOR, TRAFFIC & SAFETY

ORIGINAL ON FILE

MARYLAND DOT - STATE HIGHWAY ADMINISTRATION
Office of Traffic & Safety
TRAFFIC ENGINEERING DESIGN DIVISION

MD 16 OVER PARSONS CREEK
BRIDGE # 9003

DRAWN BY: JEFF HENKEL	F.A.P. NO.		TS NO. 3064A	SHEET NO.
CHECKED BY: MAB	S.H.A. NO. DO 5705180			
SCALE: 1"=30	COUNTY: DORCHESTER		T.I.M.S. NO. E900	OF
DATE: JUNE 2003	LOG MILE: 09001602.43			