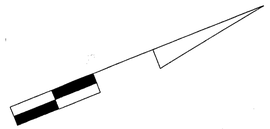

MD 276 IS CONSIDERED TO RUN IN A NORTH / SOUTH DIRECTION

EXISTING SIGNS

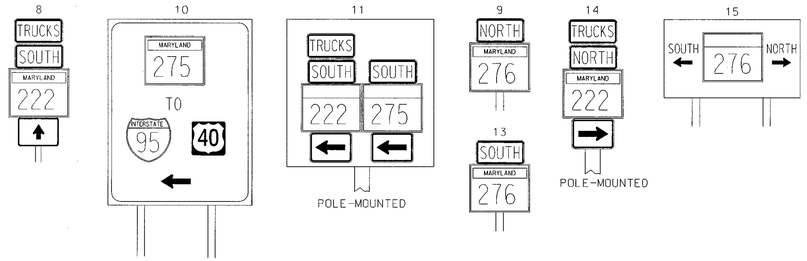

PROPOSED SIGNS

PROPOSED SIGNALS

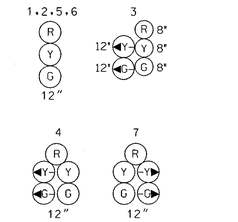

ALL SIGNALS ARE TO BE BLACK-FACED

NEMA PHASING

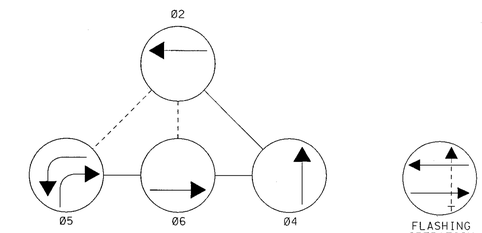

PHASING NOTES:
1.) PHASES ASSOCIATED BY A DASHED LINE WILL OPERATE CONCURRENTLY
2.) PHASES ASSOCIATED BY A SOLID LINE WILL NOT OPERATE CONCURRENTLY

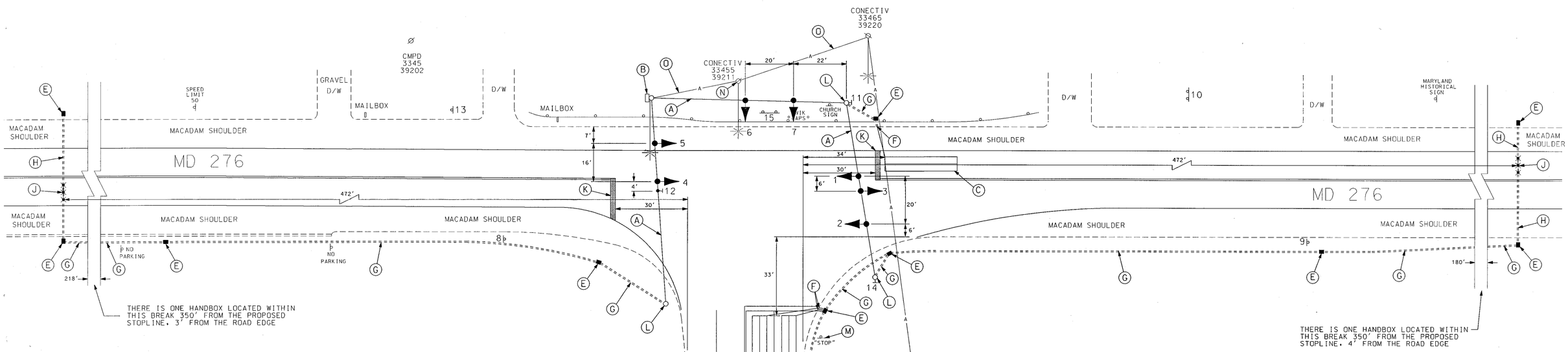

CONSTRUCTION DETAILS

A. Remove existing signal heads and install proposed signal heads as shown. (Note: Contractor shall re-ring existing span wire and use existing wiring where appropraite (See Wiring Diagram).

B. Install new controller with two (2) four channel rack mounted amplifier detectors in existing pole mounted cabinet as shown. (Note: Contractor shall rotate existing lighting luminaire 15° from strain pole.)

C. Install 6' x 30' loop detector encased in ¼" flexible tubing quadrupole type (3-6-3).

D. Install 6' x 6' loop detector encased in ¼" flexible tubing (4-turns).

E. Install handhole.

F. Install 1" liquid tight flexible non-metallic electrical conduit (detector wire sleeve).

G. Install 3" polyvinyl chloride electrical conduit (Schedule 80) (trenched).

H. Install 3" polyvinyl chloride electrical conduit (Schedule 80) (bored).

J. Install non-invasive microloop probe with 1000 ft. lead in cable.

K. Install 24" white heat applied permanent preformed thermoplastic pavement marking (stopline).

L. Use existing strain pole and existing conduit bend in pole base.

M. Remove existing stop sign as shown.

N. CONECTIV shall remove the lighting luminaire from CONECTIV pole 333455-39211.

O. Existing overhead electrical service maintained by CONECTIV.

GENERAL NOTES:

1. The loop detectors and conduit are to be installed prior to the installation of the pavement markings.
2. All underground utilities shown on these plans are schematic only and may not be complete. The contractor shall be responsible for notifying "MISS UTILITY" prior to construction so that all utilities may be located in the field. If the contractor perceives that a conflict between the utilities and the traffic signal will occur, the contractor shall notify the project engineer immediately so that the conflict may be resolved.
3. All pavement markings detailed are proposed and are to be installed in accordance with SHA standards.

GEOMETRIC LEGEND
PROPOSED
EXISTING

LEGEND OF UNDERGROUND AND OVERHEAD UTILITIES
AERIAL CABLE — A — A —
ELECTRIC — E — E —
TELEPHONE — T — T —
GAS — G — G —
SEWER — S — S —
WATER — W — W —
CABLE TV — TV — TV —

REVISION "B"

STREET TRAFFIC STUDIES, LTD.
400 Crain Hwy. N.W.
Glen Burnie, MD 21061
Ph (410) 590-5500
Fax (410) 590-6637

4508.dgn WT-6

CHAIR: LEWIS/ASH/BEM TUD #: XX10003-41

REVISIONS				APPROVALS
				TEAM LEADER, TRAFFIC ENGINEERING DESIGN DIVISION
				ASST. CHIEF, TRAFFIC ENGINEERING DESIGN DIVISION
B 2/11/04 UPGRADE ICB TO FULL COLOR TRAFFIC CONTROL DEVICE SHA NO.: XX4065185				CHIEF, TRAFFIC ENGINEERING DESIGN DIVISION
JWA				
A 5/92 REMOVED SIGNAL AND INSTALL INTERSECTION CONTROL BEACON				DIRECTOR, TRAFFIC & SAFETY

ORIGINAL ON FILE

MARYLAND DOT - STATE HIGHWAY ADMINISTRATION
Office of Traffic & Safety
TRAFFIC ENGINEERING DESIGN DIVISION

MD 276 AND MD 275

DRAWN BY:	BRUCE THOMPSON	F.A.P. NO.		TS NO. 15028	SHEET NO. 1 OF 2
CHECKED BY:		S.H.A. NO.			
SCALE:	1"= 20'	COUNTY:	CECIL	T.I.M.S. NO. F721	
DATE:	4-29-92	LOG MILE:	07027502.25		