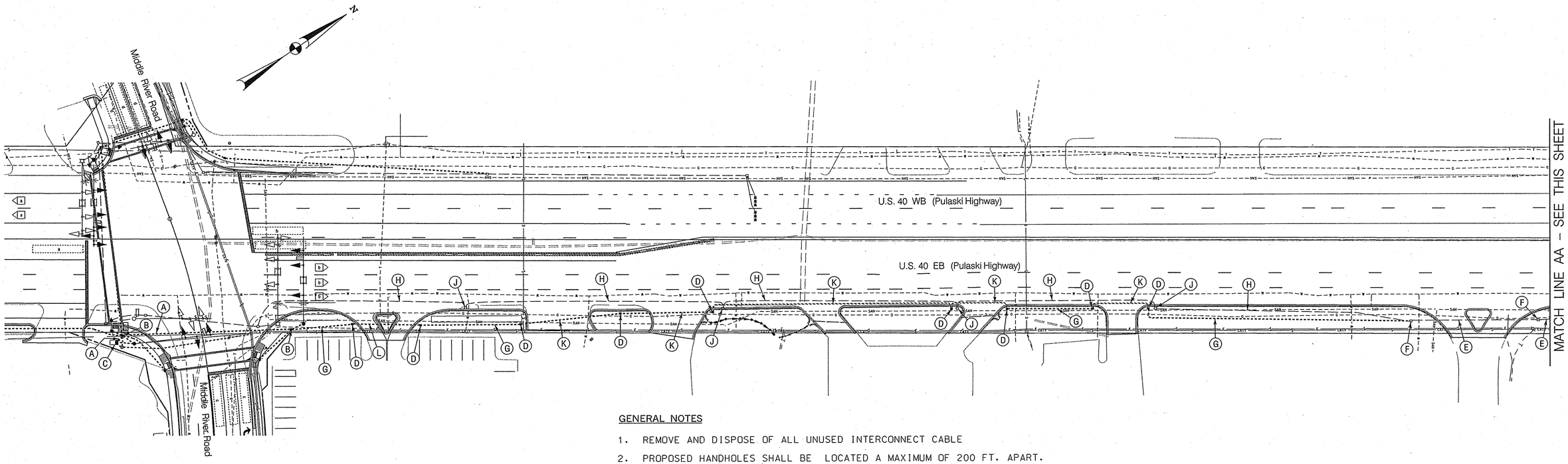

GENERAL NOTES

1. REMOVE AND DISPOSE OF ALL UNUSED INTERCONNECT CABLE
2. PROPOSED HANDHOLES SHALL BE LOCATED A MAXIMUM OF 200 FT. APART.

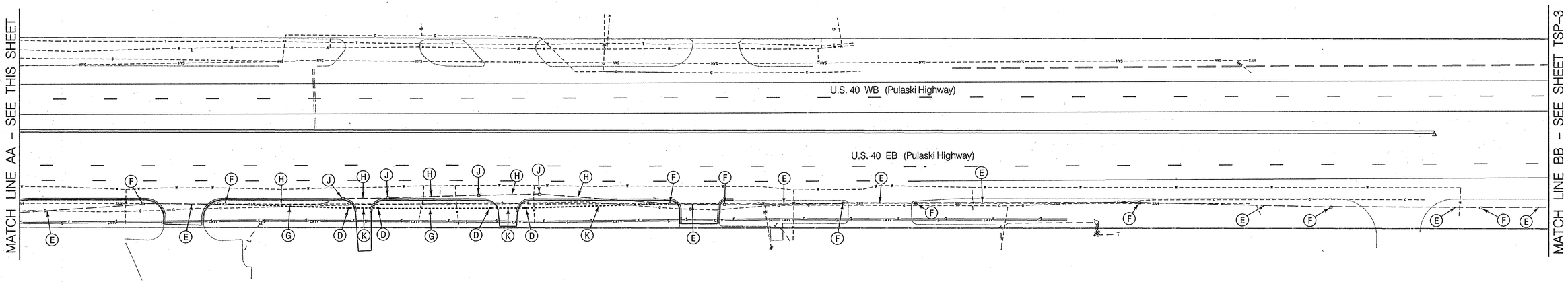

CONSTRUCTION DETAILS

A. USE PROPOSED CONDUIT. INSTALL 12-PAIR COMMUNICATION CABLE. (SEE SIGNAL PLANS)
B. USE PROPOSED HANDHOLE. INSTALL 12-PAIR COMMUNICATION CABLE. (SEE SIGNAL PLANS)
C. USE PROPOSED BASE MOUNTED CABINET AND CONTROLLER. INSTALL 12-PAIR COMMUNICATION CABLE. (SEE SIGNAL PLANSO
D. INSTALL HANDHOLE. INSTALL 12-PAIR COMMUNICATION CABLE.
E. USE EXISTING CONDUIT. INSTALL 12-PAIR COMMUNICATION CABLE.
F. USE EXISTING HANDHOLE. INSTALL 12-PAIR COMMUNICATION CABLE.
G. INSTALL 3 IN. PVC SCHEDULE 80 ELECTRICAL CONDUIT - TRENCHED. INSTALL 12-PAIR COMMUNICATION CABLE.
H. CAP AND ABANDON EXISTING CONDUIT.
J. REMOVE EXSITING HANDHOLE.
K. INSTALL 3 IN. PVC SCHEDULE 80 ELECTRICAL CONDUIT - SLOTTED.
L. INSTALL 3 IN. PVC SCHEDULE 80 ELECTRICAL CONDUIT - BORED.

APPROVALS	REVISIONS
TEAM LEADER 5-14-07	
ASST. DIV. CHIEF 5-14-07	
DIVISION CHIEF 5/14/07	
OFFICE DIRECTOR	

PLOTTED: 05-10-2007
FILE: n:\31530-06\caddi\pSG-C002_US40.dgn

STATE OF MARYLAND
DEPARTMENT OF TRANSPORTATION
STATE HIGHWAY ADMINISTRATION
OFFICE OF TRAFFIC & SAFETY
~~TRAFFIC ENGINEERING DESIGN DIVISION~~
U.S. 40 (Pulaski Highway) ~~and~~ from Middle River Road to Modus Lane
Middle River, Maryland

INTERCONNECT PLAN

SCALE 1" = 20' DATE 5/407 CONTRACT NO. BA4045176

DESIGNED BY B. DONOWAY
DRAWN BY B. DONOWAY
CHECKED BY N. LEARY
F.A.P. NO. SEE TITLE SHEET
COUNTY BALTIMORE
LOGMILE
T.I.M.S. NO. F435
TOD NO. TS-628F

DRAWING NO. TSP-02 OF 04 SHEET NO. 73A OF 78

BY: icheng