PROJECT DESCRIPTION

I. GENERAL

This project involves the installation of a new traffic control signal at the intersection of US 1 and Perry Hall Marketplace/Northview Shopping Center Entrances in Baltimore County, Maryland. US 1 is considered to run in a north/south direction.

II. INTERSECTION OPERATION

The intersection is to operate in a NEMA six (6) phase, full-traffic-actuated mode. There will be an exclusive/permissive left turn phase for both the north and southbound movements of US 1. The US 1 through movements will operate concurrently. The Perry Hall Marketplace/ Northview Shopping Center Entrances will operate concurrently.

An eight phase, full-traffic-actuated, solid state digital controller with intersection monitor and harness, battery back-up, and 3 four-channel rack mounted time delay output loop detector amplifiers housed in a base mounted cabinet are to be installed at this location.

Interconnect cable shall be installed between the following traffic control signals:
US 1 at Baker Ln/Chapel Rd; US 1 at Perry Hall Marketplace/Northview Shopping Center Entrances; and US 1 at Forge Rd.

EQUIPMENT LIST

A. Approved S.H.A. equipment to be purchased by the Developer and installed by the Contractor. All equipment in this list shall have catalog cuts submitted for approval prior to installation.

Quantity	Units	Specification Section	Description
2	EA	818	27 ft. steel twin mast arm pole with two 50 ft. mast arms [Note: four 1-3/4 in. x 90 in. anchor bolts].
1	EA	816	Standard S.H.A. traffic signal controller, base mounted cabinet, and 3 four-channel loop detector amplifiers [Note: Controller and cabinet shall be supplied by Econolite and delivered to the S.H.A. signal shop for wiring and testing. Contact Mr. Ed Rodenhizer (410) 787-7650].
6	EA	814	12 in., one-way, three section (R,Y,G) black faced adjustable traffic signal head with mast arm mounting hardware and tunnel visors.
2	EA	814	12 in., one-way, five section (R,Y,YA,G,GA) black faced adjustable traffic signal head with mast arm mounting hardware and tunnel visors.
2	EA	814	12 in./8 in., one-way, five section (12 in. YA, GA/ 8 in. R,Y,G) black faced adjustable traffic signal head with mast arm mounting hardware and tunnel visors.
2	EA	813	36 in. x 42 in. R 10-12 sign with mast arm mounting hardware.
2	EA	813	30 in. x 36 in. R 3-5(L) sign with mast arm mounting hardware.
2	EA	813	18 in. x 60 in. M 95-1 sign with mast arm mounting hardware.
2	EA	813	48 in. x 48 in. W 3-3 "NEW" sign for ground mounting.
1	EA	806	15 ft. luminaire arm.
1	EA	806	250 W H.P.S. lamp and luminarie.
4	EA	---	Micro-loop probes (set of 3) with 500 ft. lead-in cable.

B. Equipment to be furnished and/or installed by the Contractor.
All equipment in this list shall have catalog cuts submitted for approval prior to installation.

Quantity	Units	Specification Section	Description
Lump Sum	LS	108	Mobilization.
Lump Sum	LS	104	Maintenance of traffic.
5	CY	205	Test pit excavation.
11	EA	811	Handhole.
825	LF	815	Sawcut for signal loop detector.
2850	LF	810	Loop detector wire (No. 14 A.W.G.) encased in flexible tubing.
830	LF	810	2-conductor (aluminum shielded) electrical cable (No. 14 A.W.G.).
75	LF	810	2-conductor electrical tray cable (No. 12 A.W.G.).
120	LF	810	5-conductor electrical cable (No. 14 A.W.G.).
1000	LF	810	7-conductor electrical cable (No. 14 A.W.G.).
1000	LF	810	12-Pair Voice Grade Jelly Filled Telemetry Interconnect Cable (No. 19 A.W.G.)
1800	LF	810	12-Pair Voice Grade Self-Supporting Telemetry Interconnect Cable (No. 19 A.W.G.)
5	LF	810	3-wire (No. 4 A.W.G.) electrical cable.
5	LF	810	3-wire (No. 8 A.W.G.) electrical cable.
200	LF	804	Bare copper stranded ground wire (No. 6 A.W.G.).
60	LF	805	1 in. liquid tight flexible non-metalic conduit for loop detector sleeve.
660	LF	805	2 in. polyvinyl chloride [Schedule 80] electrical conduit - trenched.
330	LF	805	2 in. polyvinyl chloride [Schedule 80] electrical conduit - bored.
40	LF	805	2 in. polyvinyl chloride [Schedule 80] electrical riser.
2	EA	805	2 in. weatherhead.
70	LF	805	3 in. polyvinyl chloride [Schedule 80] electrical conduit - trenched.
160	LF	805	3 in. polyvinyl chloride [Schedule 80] electrical conduit - bored.
80	LF	805	4 in. polyvinyl chloride [Schedule 40] electrical conduit - trenched.
6.55	CY	801	Concrete foundation for traffic signal equipment.
3	EA	804	Ground rod - 3/4 in. diameter x 10 ft. length.
1	EA	807	Control and distribution equipment (120/240 V, one phase, three wire system) for a type B-6 underground electrical service.
120	LF	500	24 in. wide HAPPTPM - white for stop line.
82	LF	812	4 in. x 6 in. wood sign support.
1	EA	---	Cut, clean, cap, and galvanize steel mast arm pole.
4	EA	---	Cut, clean, cap, and galvanize steel mast arm.
LumpSum	LS	---	As-built for S.H.A. [on CADD].

CONTACT LIST

The contact persons for District #4 are as follows:

Mr. Dave Malkowski
District Engineer
410-321-2810

Mr. Randall Scott
Assistant District Engineer - Traffic
410-321-2798

Mr. Joseph McMahon
Assistant District Engineer - Utility
410-321-2841

Mr. Dave Ramsey
Assistant District Engineer - Maintenance
410-321-2761

Mr. Richard L. Daff
Chief, Traffic Operations Division
410-787-7630

The Power Company Representative is:
Baltimore Gas and Electric Company
Mr. Bernie Thurman
7317 Parkway Drive South
Hanover, Maryland 21076
410-859-9030

Phase Chart

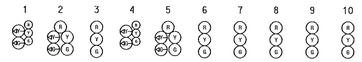

	1	2	3	4	5	6	7	8	9	10
Phase 1 & 5	R G	R G	R	R G	R G	R	R	R	R	R
1 & 5 Change to Phase 1 & 6 or Phase 2 & 5 or Phase 2 & 6										
Phase 1 & 6	G G	G G	G	R	R	R	R	R	R	R
1 Change	G Y	G Y	G	R	R	R	R	R	R	R
Phase 2 & 5	R	R	R	G G	G G	G	R	R	R	R
5 Change	R	R	R	G Y	G Y	G	R	R	R	R
Phase 2 & 6	G	G	G	G	G	G	R	R	R	R
2 & 6 Change	Y	Y	Y	Y	Y	Y	R	R	R	R
Phase 4 & 8	R	R	R	R	R	R	G	G	G	G
4 & 8 Change	R	R	R	R	R	R	Y	Y	Y	Y
Flashing Operation	FL/Y	FL/Y	FL/Y	FL/Y	FL/Y	FL/Y	FL/R	FL/R	FL/R	FL/R

Wiring Diagram

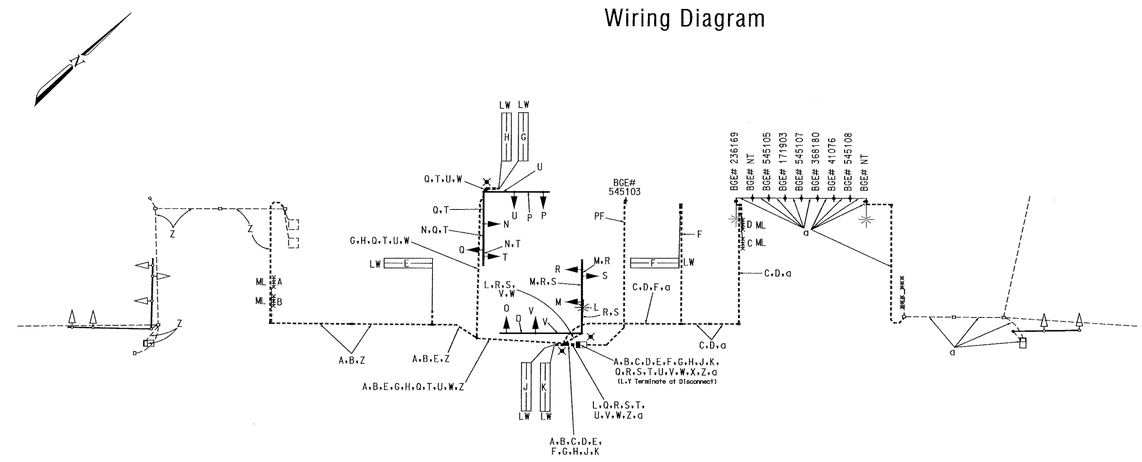

A, B, C, D	Microloop Probe Lead-in Cable
E, F, G, H, J, K	2-Conductor Cable (Aluminum Shielded)
L —	2-Conductor Tray Cable (No. 12 A.W.G.)
M, N, O, P	5-Conductor Electrical Cable (No. 14 A.W.G.)
Q, R, S, T, U, V	7-Conductor Electrical Cable (No. 14 A.W.G.)
W —	Bare Copper Ground Wire (No. 6 A.W.G.)
X —	3-Wire (No. 4 A.W.G.) for Traffic Signal Electrical Service
Y —	3-Wire (No. 8 A.W.G.) for Street Lighting Electrical Service
Z —	12-Pair Voice Grade Telemetry Interconnect Cable (No. 19 A.W.G.) (Chapel Rd - S.C. Entr. Run)
a —	12-Pair Voice Grade Telemetry Interconnect Cable (No. 19 A.W.G.) (S.C. Entr. - Forge Rd Run)
LW —	Loop Detector Wire (No. 14 A.W.G.) in Flexible Tubing
ML —	Microloop Probe
PF —	Proposed Underground Electrical Service By BGE
✕ —	Proposed Grounding Rod

The Traffic Group
The Traffic Group, Inc.
410-931-6600
Fax 410-931-6601

APPROVALS

TEAM LEADER, TRAFFIC ENGINEERING DESIGN DIVISION

ASST. CHIEF TRAFFIC ENGINEERING DESIGN DIVISION

2/2/00
CHIEF, TRAFFIC ENGINEERING DESIGN DIVISION

DIRECTOR, TRAFFIC & SAFETY

MARYLAND DOT - STATE HIGHWAY ADMINISTRATION
Office of Traffic & Safety
TRAFFIC ENGINEERING DESIGN DIVISION
(General Information Plan)

US 1 at Perry Hall Marketplace /Northview S.C. Entr.

DRAWN BY:	J. Dirndorfer	F.A.P. NO.	N/A	TS NO. 3986-GI	SHEET NO. 2 OF 3
CHECKED BY:		S.H.A. NO.	BW996M82		
SCALE:	N/A	COUNTY:	Baltimore	T.I.M.S. NO. D-698	
DATE:	February 2, 2000	LOG MILE:	03001021.50		

F:\98\0612\DESIGN\PLAN\CON 02 FEB 2000