MD 542 IS ASSUMED TO RUN IN A NORTH-SOUTH DIRECTION

EXISTING SIGNS

21,23,24,26 — Taylor AVE — D-3(II) (DUAL FACED) (VARIABLE x 16")

27,31,32,36 — Loch Raven BLVD — D-3(II) (DUAL FACED) (VARIABLE x 16")

22,25,30,35 — LEFT TURN YIELD ON GREEN — R10-12 (36" X 42")

28 — SOUTH MARYLAND 542 — ASSOCIATED SHIELD ASSEMBLY (30" X 51")

29 — NORTH MARYLAND 542 — ASSOCIATED SHIELD ASSEMBLY (48" X 75")

33 — NORTH MARYLAND 542 — ASSOCIATED SHIELD ASSEMBLY (30" X 51")

34 — SOUTH MARYLAND 542 — ASSOCIATED SHIELD ASSEMBLY (48" X 75")

EXISTING SIGNAL HEADS TO REMAIN

1,4,7,10 — 12"/8"

2,5,8,11 — 12"

3,6,9,12 — 12"

EXISTING SIGNAL HEADS TO BE REMOVED

13a-20a

PROPOSED SIGNAL HEADS

13-20

16" CLAMSHELL L.E.D. PEDESTRIAN SIGNAL

NEMA PHASING

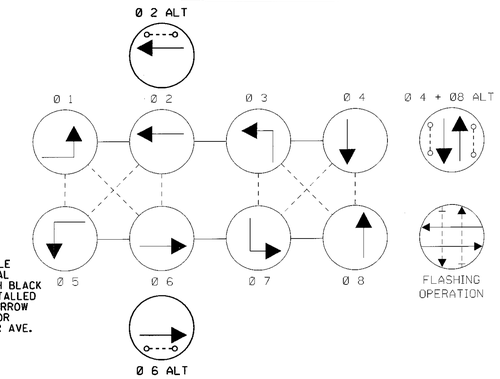

PHASING NOTES:

1. PHASES ASSOCIATED BY A SOLID LINE WILL NOT OPERATE CONCURRENTLY.
2. PHASES ASSOCIATED BY A DASHED LINE WILL OPERATE CONCURRENTLY.

GENERAL NOTES

THE CONTRACTOR SHALL PURCHASE AND DELIVER NAVIGATOR AUDIBLE PEDESTRIAN SIGNAL PUSHBUTTON, LED PEDESTRIAN SIGNAL HEAD AND PEDESTRIAN HEAD CONTROL UNIT TO SHA SIGNAL SHOP AT 7491 CONNELLEY DRIVE, HANOVER, MD 21076 TO TEST AND ASSEMBLE THE UNITS AND RECORD AUDIBLE MESSAGE. THE CONTRACTOR SHALL CONTACT MR. EDWARD RODENHIZER AT (410) 787-7652 AT LEAST THREE (3) DAYS IN ADVANCE OF DELIVERY.

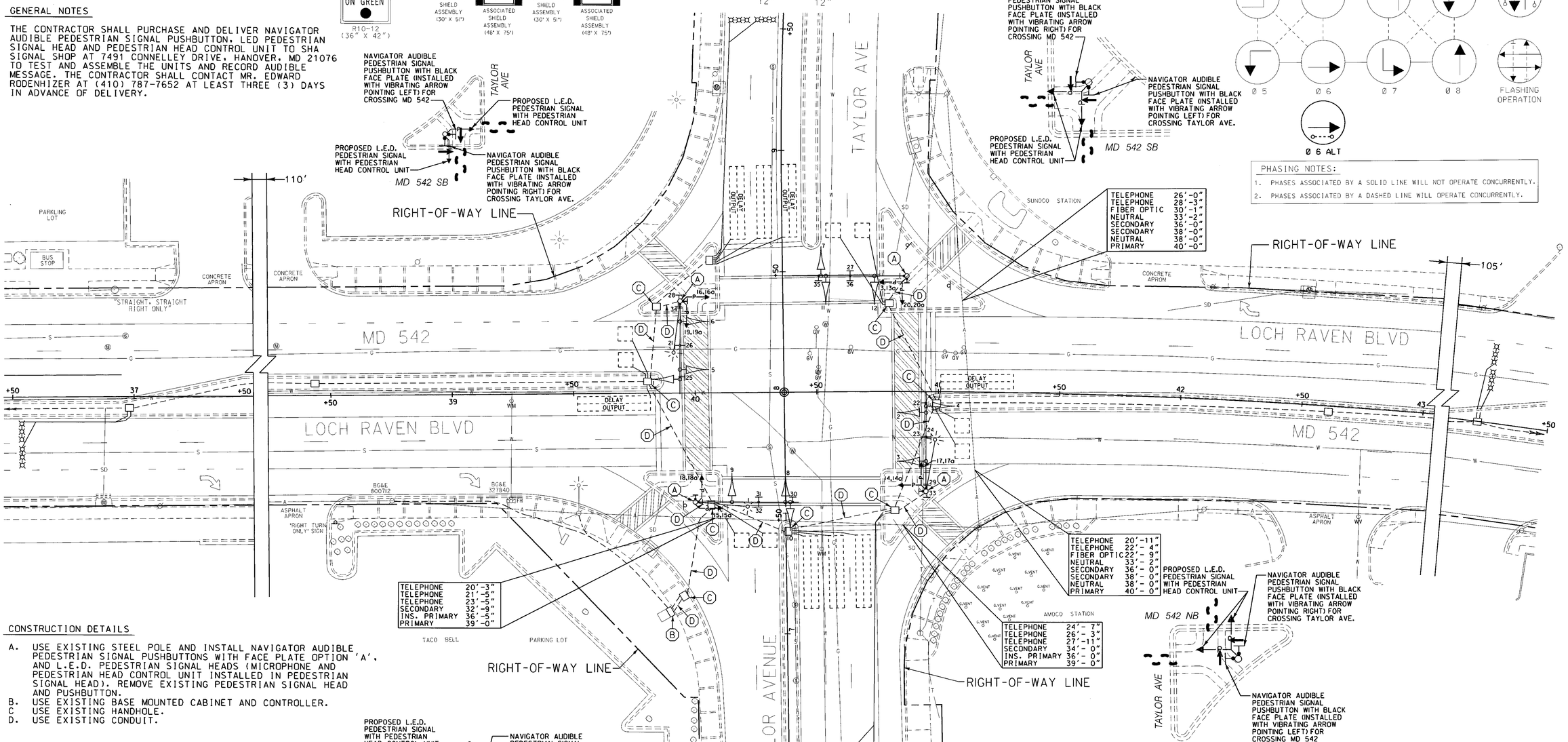

CONSTRUCTION DETAILS

A. USE EXISTING STEEL POLE AND INSTALL NAVIGATOR AUDIBLE PEDESTRIAN SIGNAL PUSHBUTTONS WITH FACE PLATE OPTION 'A', AND L.E.D. PEDESTRIAN SIGNAL HEADS (MICROPHONE AND PEDESTRIAN HEAD CONTROL UNIT INSTALLED IN PEDESTRIAN SIGNAL HEAD). REMOVE EXISTING PEDESTRIAN SIGNAL HEAD AND PUSHBUTTON.
B. USE EXISTING BASE MOUNTED CABINET AND CONTROLLER.
C USE EXISTING HANDHOLE.
D. USE EXISTING CONDUIT.

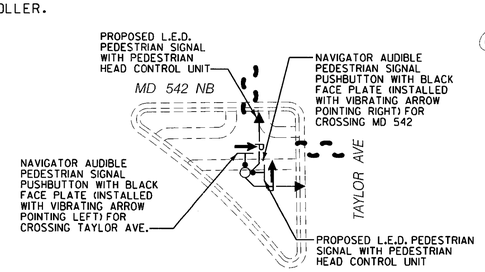

LEGEND OF UNDERGROUND AND OVERHEAD UTILITIES

AERIAL CABLE	A
ELECTRICAL	E
TELEPHONE	T
GAS	G
SEWER	SS
STORM DRAIN	SD
WATER	W
CABLE TV	TV

WR&A
Whitman, Requardt and Associates, LLP
801 South Caroline Street
Baltimore, Maryland 21231
(410) 235-3450

REVISIONS				
B INSTALL AUDIBLE PEDESTRIAN SIGNALS SHA NO. XX065385 MAY 15, 2002				
SRB	NML	DJD	DAZ	BAK TH
2 RELOCATE TRAFFIC SIGNAL POLES CONTRACT NO. BA3225183 ADDENDUM NO. 2 JUNE 1, 2000				
NML				
1 RELOCATE TRAFFIC SIGNAL POLES CONTRACT NO. BA3225183 ADDENDUM NO. 1 MAY 11, 2000				
NML				
A RECONSTRUCT TRAFFIC SIGNAL DUE TO GEOMETRIC IMPROVEMENTS CONTRACT NO. BA3225183 03/00				
NML	DJD	DAZ	BAK	TH

APPROVALS

TEAM LEADER, TRAFFIC ENGINEERING DESIGN DIVISION

ASST. TRAFFIC ENGINEERING DESIGN DIVISION

CHIEF, TRAFFIC ENGINEERING DESIGN DIVISION

DIRECTOR, TRAFFIC & SAFETY

ORIGINAL ON FILE

MARYLAND DOT - STATE HIGHWAY ADMINISTRATION
Office of Traffic & Safety

TRAFFIC ENGINEERING DESIGN DIVISION
TRAFFIC SIGNALIZATION PLAN
MD 542 (LOCH RAVEN BOULEVARD) AND TAYLOR AVENUE

DRAWN BY:	BRUCE THOMPSON	F.A.P. NO.	BA7166A54/BA	TS NO. TS-2011B	SHEET NO.
CHECKED BY:	DENNIS OODA	S.H.A. NO.			
SCALE:	1" = 20'	COUNTY:	BALTIMORE	T.I.M.S. NO. E987	1 OF 3
DATE:	9-26-84	LOG MILE:	03542000.98		

M:\20008\md542AudibleSig\sg01Taylor.dgn