HDPE PIPE DETAIL

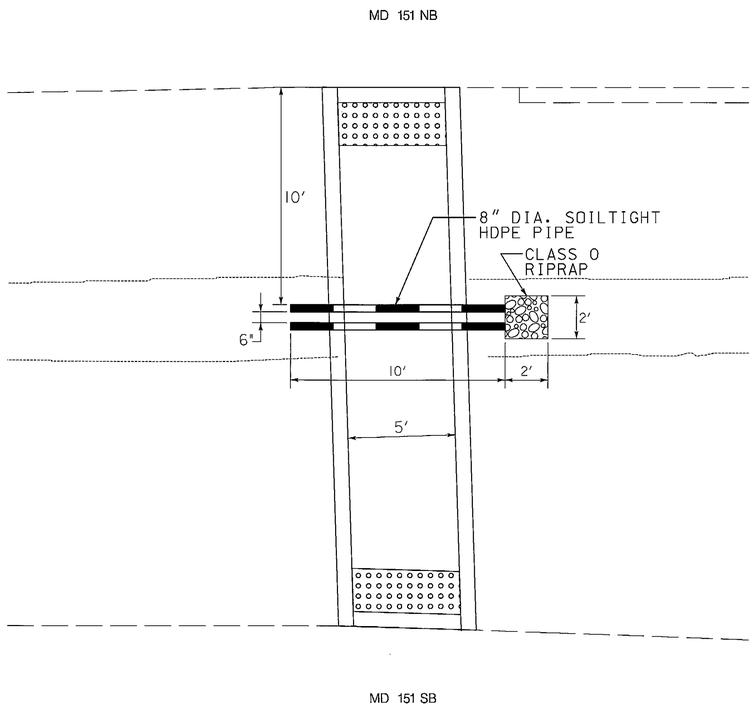

MEDIAN CUT-THROUGH DETAIL

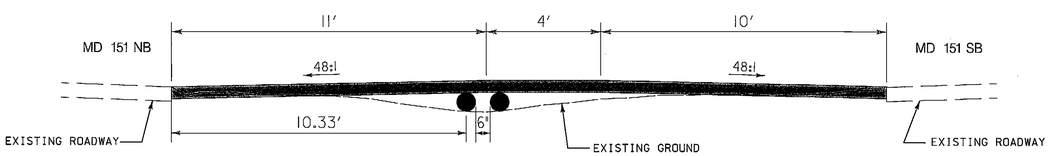

DIMENSION DIAGRAM

SCALE: 1" = 10'

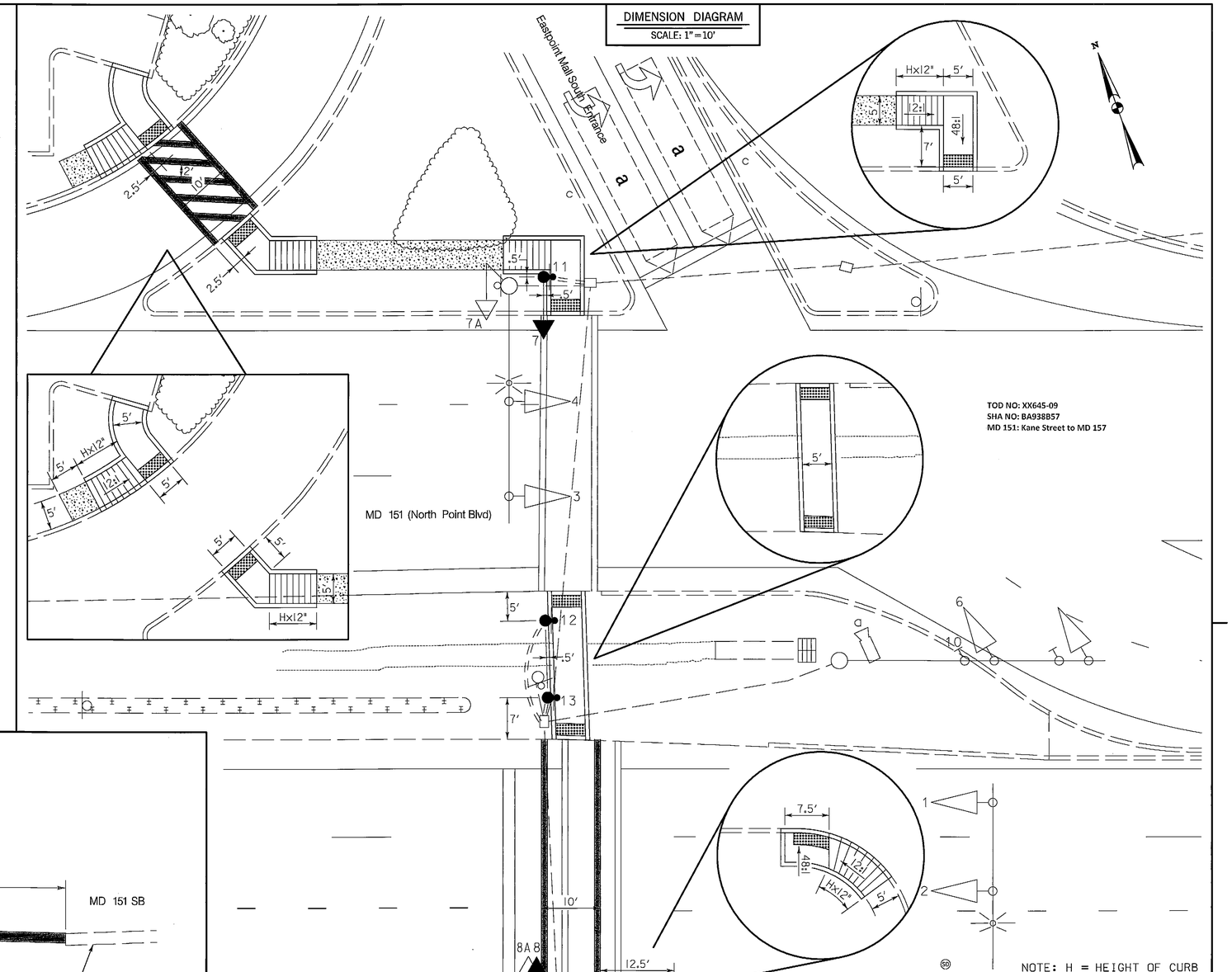

TOD NO: XX645-09
SHA NO: BA938B57
MD 151: Kane Street to MD 157

STATE OF MARYLAND
DEPARTMENT OF TRANSPORTATION
STATE HIGHWAY ADMINISTRATION

OFFICE OF TRAFFIC & SAFETY
TRAFFIC ENGINEERING DESIGN DIVISION

MD 151 (North Point Boulevard) and Eastpoint Mall NorthSouth Entrance

Baltimore, Maryland

GENERAL INFORMATION SHEET

SCALE NONE ADVERTISED DATE 7/08/2011 CONTRACT NO. XX6455185

DESIGNED BY S. Bloss
DRAWN BY S. Bloss
CHECKED BY N. Leary
F.A.P. NO.

COUNTY Baltimore
LOGMILE
TIMS NO. J964
TOD NO.

TS NO. 640 | DRAWING TSP-6 OF 7 | SHEET NO. 6 OF 7

WHITMAN, REQUARDT & ASSOCIATES, LLP
801 South Caroline Street, Baltimore, Maryland 21231

BY: sbloss

PLOTTED: Monday, July 11, 2011 AT 06:40 AM
FILE: N:\31669-151\CADD\p3G-N006_md151.dgn