MD 150 IS ASSUMED TO RUN
IN AN EAST-WEST DIRECTION

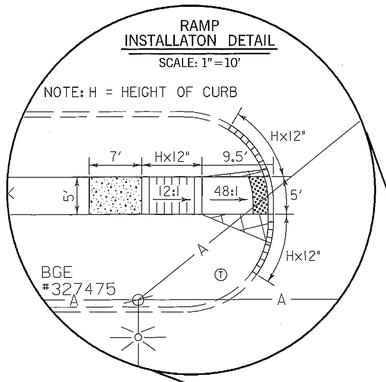

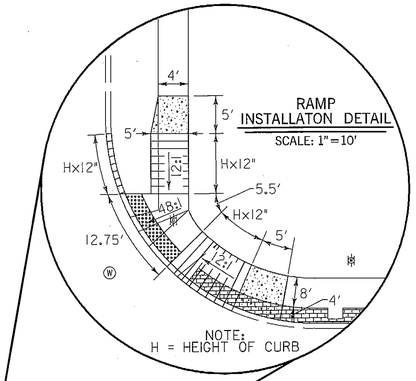

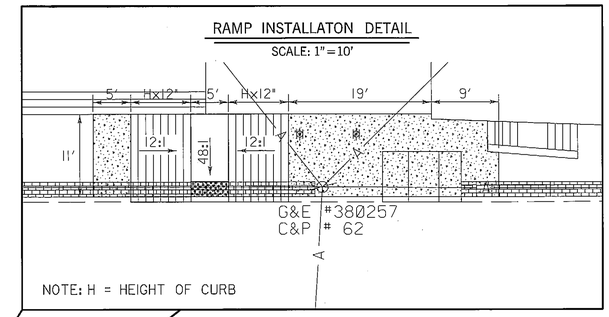

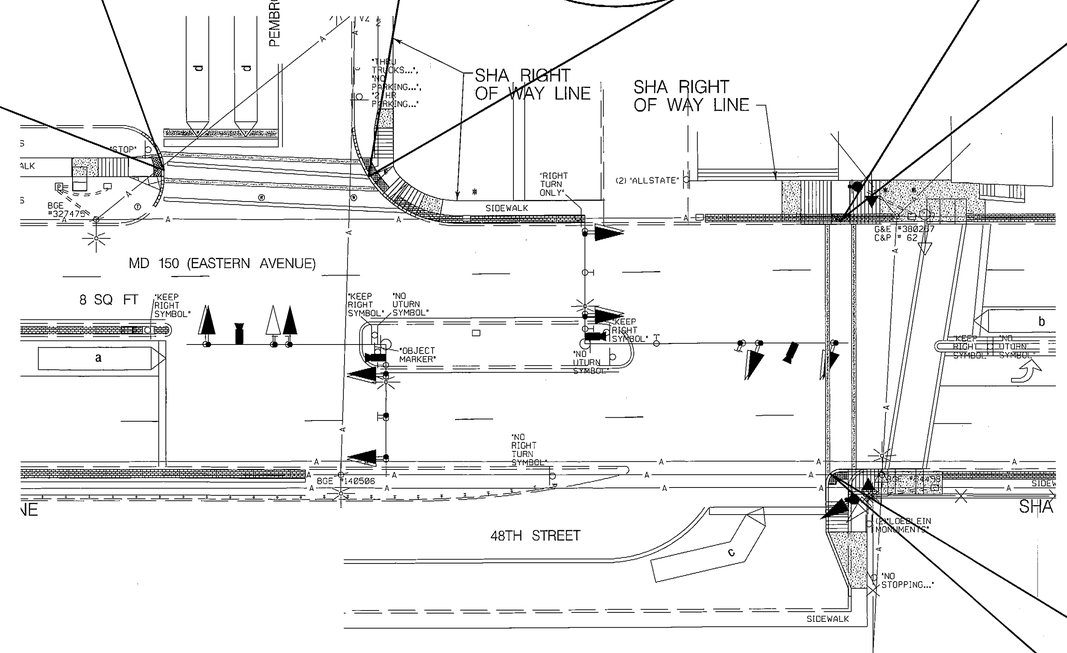

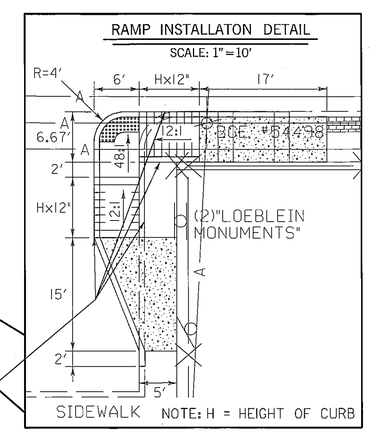

INSTALL CURB ON FRONT AND BACK OF PROPOSED RAMP. THE FRONT CURB SHALL BE DEPRESSED WITH THE SAME SLOPE AS THE PROPOSED RAMP AND THE BACK CURB SHALL BE LEVEL WITH FINAL GRADE OF PROPOSED SIDEWALK.

TOD NO: XX645-03
SHA NO: BA938B53
MD 150 @ Pembrooke Blvd/48th St.

WR&A
WHITMAN, REQUARDT & ASSOCIATES, LLP
801 South Caroline Street, Baltimore, Maryland 21231

BY: bdonoway

STATE OF MARYLAND
DEPARTMENT OF TRANSPORTATION
STATE HIGHWAY ADMINISTRATION

OFFICE OF TRAFFIC & SAFETY
TRAFFIC ENGINEERING DESIGN DIVISION

MD 150 (EASTERN AVENUE) AT PEMBROOKE BLVD/48TH STREET

EASTWOOD, MARYLAND

TRAFFIC SIGNALIZATION PLAN

SCALE 1" = 20' DATE JUNE 1, 2011 CONTRACT NO. XX6455185

DESIGNED BY L.WAESCHE
DRAWN BY L.WAESCHE
CHECKED BY N. LEARY
F.A.P. NO.

COUNTY BALTIMORE
LOGMILE 03015000.16
TIMS NO. K257
TOD NO.

TS NO. 3619-C | DRAWING TSP-2 OF 3 | SHEET NO. 2 OF 3

PLOTTED: 06-22-2011
FILE: N:\31669-111\CADD\pSG-N002_K257.dgn