WIRING DIAGRAM

WIRING KEY

- A, B, C, D, V, W — 7-CONDUCTOR ELECTRICAL CABLE (NO. 14 A.W.G.) [2]
- E, F, G, H, R, S — 5-CONDUCTOR ELECTRICAL CABLE (NO. 14 A.W.G.) [1]
- X — 4-CONDUCTOR OPTICOM DETECTOR CABLE (NO. 14 A.W.G.) [2]
- T, U — 2-CONDUCTOR ELECTRICAL CABLE (NO. 14 A.W.G.) [1]
- J, K, L — 2-CONDUCTOR ELECTRICAL CABLE (NO. 12 A.W.G.)
- M, N, O, P — VIDEO DETECTION LEAD-IN CABLE
- Q — STRANDED BARE COPPER GROUND WIRE (NO. 6 A.W.G.)
- + – 3/4 IN. X 10 FT. GROUND ROD

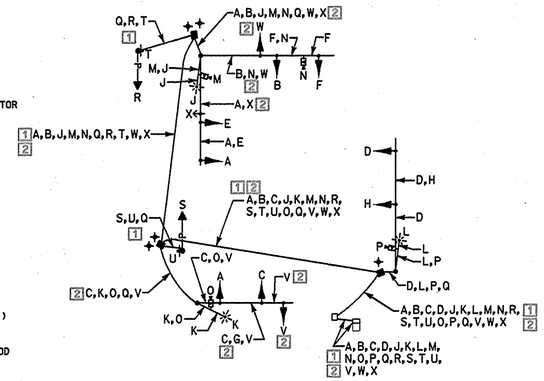

MD 150 AND MD AIR NATIONAL GUARD (PHASE 1-3)

WIRING KEY

- A, B, C — 5-CONDUCTOR ELECTRICAL CABLE (NO. 14 A.W.G.)
- D, E, F, G, H, J — MICROLOOP PROBE LEAD-IN
- M — 3-CONDUCTOR ELECTRICAL CABLE (NO. 12 A.W.G.)
- N — 5-CONDUCTOR ELECTRICAL CABLE (NO. 14 A.W.G.)
- O — STRANDED BARE COPPER GROUND WIRE (NO. 6 A.W.G.)
- LW – LOOP WIRE (NO. 14 A.W.G.)
- ML – MICROLOOP PROBE SET
- + – 3/4 IN. X 10 FT. GROUND ROD

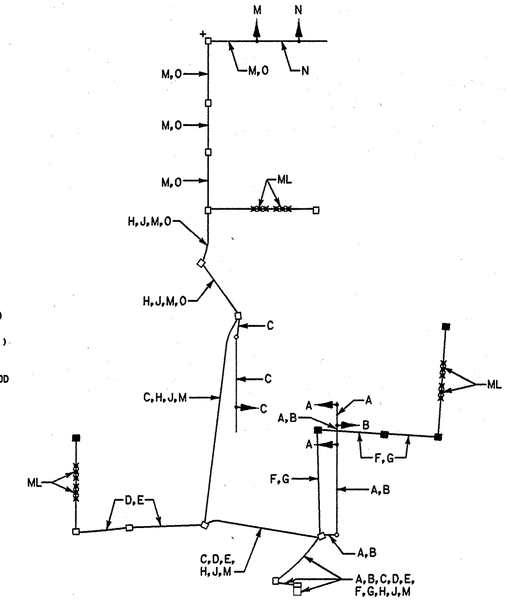

MD 150 AND MD AIR NATIONAL GUARD (ULTIMATE)

WIRING KEY

- A, B, C, D — 7-CONDUCTOR ELECTRICAL CABLE (NO. 14 A.W.G.)
- E, F, G, H, BB — 5-CONDUCTOR ELECTRICAL CABLE (NO. 14 A.W.G.)
- J, K — 2-CONDUCTOR ELECTRICAL CABLE (NO. 12 A.W.G.)
- N, O, P, Q, R, S — MICROLOOP PROBE LEAD-IN
- T, U — VIDEO DETECTION LEAD-IN CABLE
- V — STRANDED BARE COPPER GROUND WIRE (NO. 6 A.W.G.)
- W, X, Y — 1-CONDUCTOR ELECTRICAL CABLE (NO. 4 A.W.G.)
- Z — 12-PAIR COMMUNICATION CABLE
- LW – LOOP WIRE (NO. 14 A.W.G.)
- ML – MICROLOOP PROBE SET
- + – 3/4 IN. X 10 FT. GROUND ROD

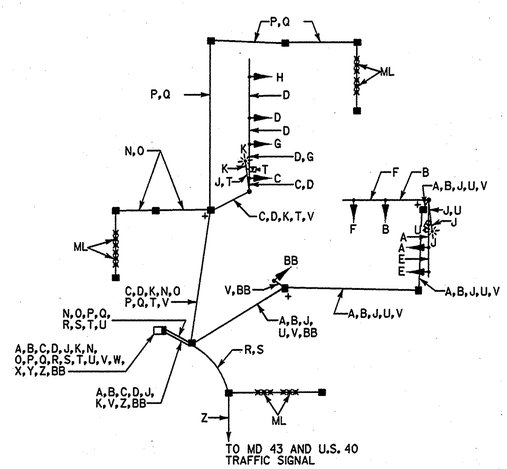

MD 43 (WHITE MARSH BLVD) AND (RAMP A)

[2] REVISED WIRING DIAGRAM AT MD 150 AND AIR NATIONAL GUARD FOR SPLIT PHASE OPERATION AND OPTICOM DETECTION GREENLINE REVISION NO. 2 10/13/2006

[1] REVISED WIRING DIAGRAM AT MD 150 AND AIR NATIONAL GUARD FOR PEDESTRIAN CROSSING GREENLINE REVISION NO. 1 6/15/2006

TSP-15

WR&A
Whitman, Requardt and Associates, LLP
801 South Caroline Street
Baltimore, Maryland 21231
(410) 235-3450

MARYLAND DOT - STATE HIGHWAY ADMINISTRATION
Office of Traffic & Safety
TRAFFIC ENGINEERING DESIGN DIVISION
TRAFFIC SIGNALIZATION PLAN
MD 43 (WHITE MARSH BLVD)

DRAWN BY: B. DONOWAY	F.A.P. NO.		TS NO. TS-601C	SHEET NO.
CHECKED BY: N. LEARY	S.H.A. NO.	BA8475171		
SCALE:	COUNTY:	BALTIMORE	T.I.M.S. NO. E442	OF
DATE: 2:58:54 PM	LOG MILE:			

m:\3142510\Greenline2_10.12.2006\sd01md43_GL2.dgn