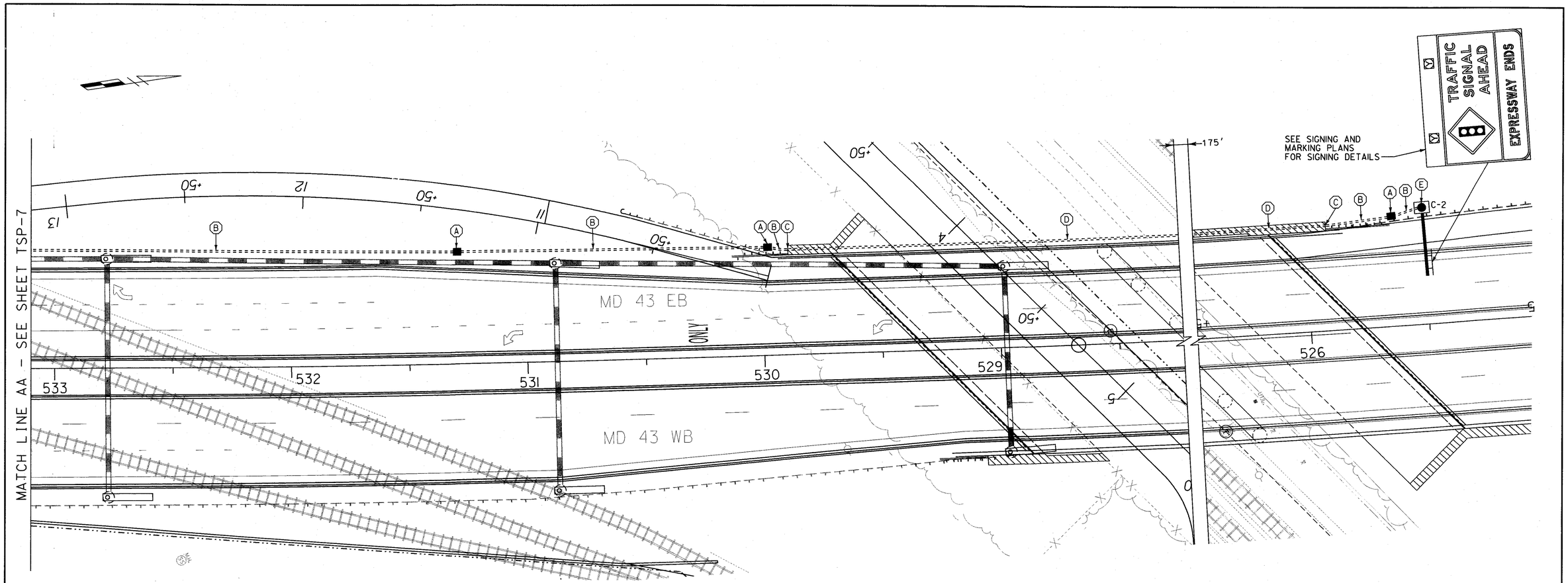

TRAFFIC SIGNAL INSTALLATION DETAIL
SIGN C-2
(REAR VIEW)

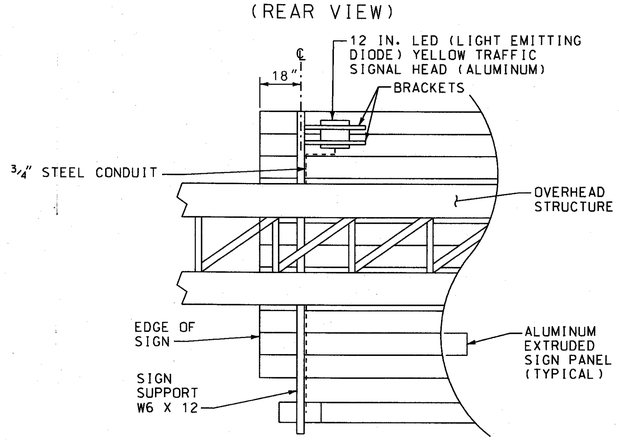

NOTE: THE SECOND LED TRAFFIC SIGNAL HEAD SHALL BE INSTALLED IN THE SAME LOCATION AT THE OTHER END OF SIGN.

CONSTRUCTION DETAILS

A. INSTALL HANDHOLE.
B. INSTALL 3 IN. SCHEDULE 80. POLYVINYL CHLORIDE ELECTRICAL CONDUIT (TRENCHED).
C. INSTALL 3 IN. SCHEDULE 80. RIGID POLYVINYL CHLORIDE ELECTRICAL CONDUIT (TRENCHED). CONDUIT SHALL TIE INTO CONDUIT EXITING BRIDGE PARAPET. (SEE BRIDGE PLANS FOR DETAILS)
D. USE EXISTING CONDUIT IN PARAPET.
E. USE EXISTING CANTILEVER SIGN STRUCTURE - SEE TRAFFIC SIGNAL INSTALLATION DETAIL.

LEGEND OF UNDERGROUND AND OVERHEAD UTILITIES

AERIAL CABLE	A
ELECTRICAL	E
TELEPHONE	T
GAS	G
SEWER	SS
STORM DRAIN	SD
WATER	W
CABLE TV	TV

WR&A
Whitman, Requardt and Associates, LLP
801 South Caroline Street
Baltimore, Maryland 21231
(410) 235-3450

TSP-8

MARYLAND DOT - STATE HIGHWAY ADMINISTRATION
Office of Traffic & Safety
TRAFFIC ENGINEERING DESIGN DIVISION
TRAFFIC SIGNALIZATION PLAN
MD 150 (EASTERN AVE) AND ENTRANCE TO WARFIELD AIR NATIONAL GUARD ARMORY

DRAWN BY:	S. BLOSS	F.A.P. NO.		TS NO.	SHEET NO.
CHECKED BY:	N. LEARY	S.H.A. NO.	BA8475171	TS-2568B	
SCALE:	1" = 20'	COUNTY:	BALTIMORE	T.I.M.S. NO.	OF
DATE:	11/6/2002	LOG MILE:		E442	

M:\31425\10\sa503amd43-sianalplan@md150.dgn