F.H.W.A. REGION NO.	STATE	FED. AID PROJ. NO.	SHEET NO.	TOTAL SHEETS
3	MD		2	2

PROJECT DESCRIPTION

I GENERAL

THIS PROJECT INVOLVES THE INSTALLATION OF A NEW TRAFFIC CONTROL SIGNAL, LIGHTING, SIGNING AND PAVEMENT MARKINGS AT THE ENTRANCE TO WARFIELD AIR NATIONAL GUARD ARMORY IN BALTIMORE COUNTY. THE EXISTING HAZARD IDENTIFICATION BEACONS ALONG MD 150 WILL BE RECONSTRUCTED TO A MAST ARM DISPLAY ACCOMPANIED BY A "SIGNAL AHEAD / PREPARE TO STOP WHEN FLASHING" SIGN. MD 150 IS ASSUMED TO TRAVEL IN AN EAST-WEST DIRECTION.

II INTERSECTION OPERATION

THE EXISTING EIGHT-PHASE, FULL-TRAFFIC-ACTUATED CONTROLLER AND CABINET WILL BE UTILIZED TO OPERATE THE THREE-PHASE, SEMI-ACTUATED OPERATION. THE INTERSECTION SHALL BE DARK UNTIL TRAFFIC DEMANDS ACTUATION BY THE GUARDHOUSE PERSONNEL. THE H.I.B.'S WILL GIVE MD. 150 TRAFFIC ADVANCE NOTICE.

III SPECIAL NOTE

1. ALL INTERNAL WIRING TO THE CONTROLLER WILL BE PERFORMED BY THE SIGNAL SHOP. CONTACT MR. ED RODENHIZER AT (410) 787-7652, SEVENTY-TWO (72) HOURS IN ADVANCE OF THE INTENDED WORK.
2. THE CONTRACTOR IS RESPONSIBLE TO CONTRACT LT. COL SCOTT A. KEARBY, P.E., BASE ENGINEER AT (410) 780-8538 FOR APPROVAL AND GUIDANCE PRIOR TO BEGINNING THE WORK.
3. CONDUIT AND LOOP DETECTORS SHALL BE INSTALLED PRIOR TO THE INSTALLATION OF THE PAVEMENT MARKINGS.

EQUIPMENT LIST

A. EQUIPMENT TO BE FURNISHED BY THE ADMINISTRATION

ITEM NO.	QUANTITY	UNIT	DESCRIPTION
9002	1	EA.	FOUR CHANNEL LOOP DETECTOR AMPLIFIER-RACK MOUNTED
9007	2	EA.	(CONT/CAB/ADD) NEMA LOAD SWITCH
9012	4	EA.	(MAST ARM MT.) 12" 1 WAY, 1 SECTION SIGNAL (YELLOW)
9014	6	EA.	(MAST ARM MT.) 12" 1 WAY, 3 SECTION SIGNAL (RYG)
9089	43	S.F.	(BONDED TO SIGNAL STRUCTURE) SIGNS 2- W3-3 - NEW (36"X36") AND FLAGS 1-ASSOCIATED SHIELD ASSEMBLY (48"X75") "WEST/EAST", "MARYLAND 150", "LEFT ARROW/RIGHT ARROW"
9089	130	S.F.	(MAST ARM MT.) SIGNS 2- "SIGNAL AHEAD/PREPARE TO STOP WHEN FLASHING" (60"X144") 2-D3-2 (16" X VAR.) DUEL FACED D3-2 "ARROW, HERCULES LN" "HERCULES LN, ARROW"

EQUIPMENT LIST

B. EQUIPMENT TO BE FURNISHED AND/OR INSTALLED BY CONTRACTOR

ITEM NO.	QUANTITY	UNIT	DESCRIPTION
1001	1	EA.	MAINTENANCE OF TRAFFIC
2001	2	C.Y.	TEST PIT EXCAVATION
5001	210	L.F.	F/I 6" YELLOW PERMANENT PREFORMED PAVEMENT MARKING TAPE
5002	100	L.F.	F/I 6" WHITE PERMANENT PREFORMED PAVEMENT MARKING TAPE
5004	150	L.F.	F/I 24" WHITE PERMANENT PREFORMED PAVEMENT MARKING TAPE
8001	15	C.Y.	F/I CONCRETE FOR SIGNAL FOUNDATION
8006	2	EA.	CUT, CLEAN, GALVANIZE AND CAP TRAFFIC SIGNAL STRUCTURE
8011	10	EA.	1 SIGNAL HEAD (ANY TYPE)
8021	225	L.F.	F/I SAWCUT FOR SIGNAL (LOOP DETECTOR)
8022	30	L.F.	F/I 1" ELECTRICAL CONDUIT GALVANIZED SLEEVE
8024	120	L.F.	F/I 2" ELECTRICAL CONDUIT (PVC-SCHEDULE 80 TRENCHED)
8029	100	L.F.	F/I 3" ELECTRICAL CONDUIT (PVC-SCHEDULE 80 BORED)
8033	2	EA.	F/I ELECTRICAL HANDHOLE
8034	5	EA.	F/I GROUND ROD (3/4" X 10 FT)
8040	970	L.F.	F/I LOOPWIRE (NO. 14 AWG-THWN)
8041	40	L.F.	F/I ELECTRICAL CABLE 2 CONDUCTOR (ALUMINUM SHIELDED)
8044	2290	L.F.	F/I ELECTRICAL CABLE 5-CONDUCTOR (NO. 14 AWG)
8045	1060	L.F.	F/I ELECTRICAL CABLE 7- CONDUCTOR (NO. 14 AWG)
8046	450	L.F.	F/I ELECTRICAL CABLE 2- CONDUCTOR (NO. 12 AWG-TRAY)
8048	1	EA.	F/I MAST ARM POLE AND TWIN 50 FT. MAST ARM (FOUR-1 3/4" X 90" ANCHOR BOLTS)
8049	100	L.F.	F/I NO.6 AWG STRANDED BARE COPPER GROUND WIRE
8053	43	S.F.	INSTALL POLE MOUNTED SIGNS
8054	130	S.F.	INSTALL OVERHEAD SIGNS
8056	2	EA.	F/I 250 WATT HPS LUMINAIRE WITH PHOTOCELL
8057	2	EA.	F/I LIGHTING/BRACKET ARM FOR TRAFFIC SIGNAL STRUCTURE
8058	2	EA.	REMOVE AND DISPOSE OF EXISTING FOUNDATION 12" BELOW GRADE
8059	2	EA.	REMOVAL OF EXISTING GALVANIZED SIGNAL STRUCTURE
8060	2	EA.	DELIVERY OF REMOVED GALVANIZED SIGNAL STRUCTURE
8061	1	EA.	REMOVE AND DISPOSE OF EXISTING MATERIALS AND EQUIPMENT
8062	1	EA.	DIGITIZE EXISTING PLANS AND AS BUILT TRAFFIC CONTROL DEVICE
8098	3	EA.	F/I MAST ARM POLE AND 50 FT. MAST ARM (FOUR- 1 3/4" X 90" ANCHOR BOLTS)
NEG.	1	EA.	FIND AND RAISE EXISTING HANDHOLE TO GRADE (REBUILD IF NECESSARY)

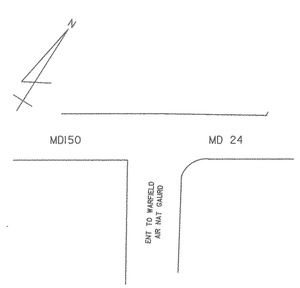

INTERSECTION SKETCH

WIRING KEY

A,B - 2 - CONDUCTOR ELECTRICAL CABLE (ALUMINUM SHIELDED)

D,E,F,G,H - 5 - CONDUCTOR ELECTRICAL CABLE (NO. 14 A.W.G.)

C,J - 2 - CONDUCTOR ELECTRICAL CABLE (NO. 12 A.W.G. TRAY)

K,L,M - 7 - CONDUCTOR ELECTRICAL CABLE (NO. 14 A.W.G.)

ES - EXISTING SERVICE TO BE MAINTAINED

LW - LOOP WIRE (NO. 14 A.W.G.-THWN)

GHC - GUARDHOUSE CABLE TO BE MAINTAINED

N,O,P,Q,R - NO.6 A.W.G. STRANDED BARE COPPER GROUND WIRE

* - GROUND ROD

SIGNAL WIRING DIAGRAM

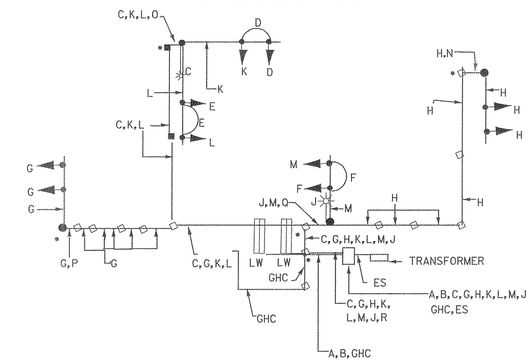

PHASE CHART

NON-ACTUATED OPERATION	DARK	DARK	DARK	DARK	DARK	DARK	DARK	DARK	DARK	DARK	STOP & SIGN
PHASES 2+6	DARK	DARK	G	G	DARK	DARK	G	G	R	R	
2+6 CHANGE	F/Y	F/Y	Y	Y	F/Y	F/Y	Y	Y	R	R	
PHASE 4	F/Y	F/Y	R	R	F/Y	F/Y	R	R	G	G	
4 CHANGE	F/Y	F/Y	R	R	F/Y	F/Y	R	R	Y	Y	
FLASHING OPERATION	DARK	DARK	F/Y	F/Y	DARK	DARK	F/Y	F/Y	F/R	F/R	

UTILITY LEGEND

—T—T—	TELEPHONE CABLES
—G—G—	GAS MAIN
—W—W—	WATER MAIN
—S—S—	SEWER MAIN
—E—E—	ELECTRIC CABLES
—A—A—	AERIAL CABLES
—BC—BC—	BURIED CABLE
—SD—SD—	STORM DRAIN

GEOMETRIC LEGEND

— — — — —	EXISTING GEOMETRICS
————	PROPOSED GEOMETRICS

PHOENIX ENGINEERING, INC.
CONSULTING ENGINEERS
813 MAIDEN CHOICE LANE, SUITE 300
BALTIMORE, MARYLAND 21228
(410) 247-8833 FAX 247-9397

APPROVALS	REVISIONS
ASST. DIVISION CHIEF, TEDO	A. RECONSTRUCT HJB.'S O.H., ADD SIGNAL S.H.A. # AW-278\185 9/97 EMM/GFP
ASST. DISTRICT ENGINEER, TRAFFIC	
CHIEF, TRAFFIC ENGINEERING DESIGN DIVISION	
DIRECTOR, OFFICE OF TRAFFIC & SAFETY	

MARYLAND DOT - STATE HIGHWAY ADMINISTRATION
Office of Traffic & Safety
TRAFFIC ENGINEERING DESIGN DIVISION
TRAFFIC SIGNALIZATION PLAN
MD. 150 AND ENTRANCE TO WARFIELD AIR NATIONAL GUARD ARMORY
LOG # 030015007.40

DRAWN BY: S.R. BARANOWSKI	F.A.P. NO.	PLAN SHEET NO.:	SHEET NO.
CHECK BY: E.M.M.	S.H.A. NO. 855-25014037	2568A-GI	2 OF 2
SCALE: 1"=20'	COUNTY BALTIMORE		