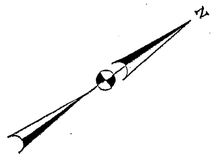

MD 147 (HARFORD ROAD) IS ASSUMED TO RUN IN A NORTH-SOUTH DIRECTION

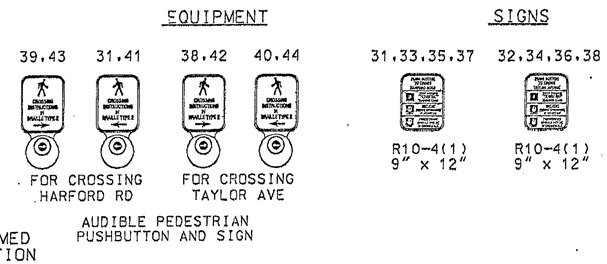

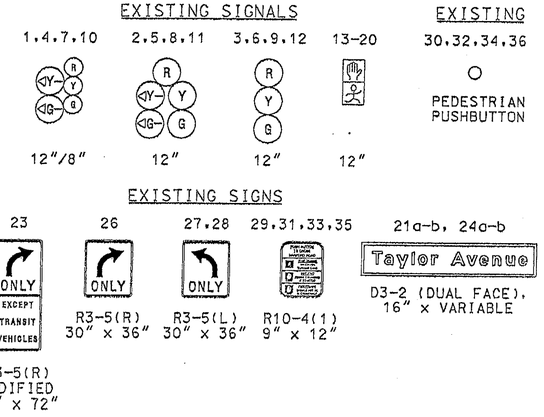

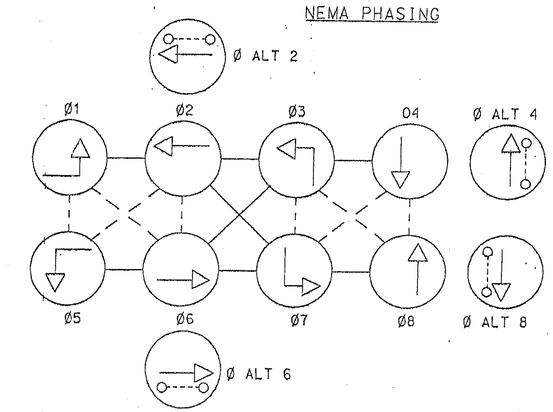

PHASES ASSOCIATED BY A DASHED LINE WILL OPERATE CONCURRENTLY
PHASES ASSOCIATED BY A SOLID LINE WILL NOT OPERATE CONCURRENTLY

Construction Details

1. Install video detection camera and video detection lead-in cable.
2. Use existing mast arm and upright. Install proposed video detection lead-in cable.
3. Use existing conduit. Install proposed video detection lead-in cable.
4. Use existing handhole. Remove existing loop detector cables and all unused cables and install proposed video detection lead-in cable.
5. Use existing conduit. Remove existing loop detector lead-in cable and all unused cables and install proposed video detection lead-in cable.
6. Use existing cabinet. Remove existing loop detector lead-in cables for side road detectors and install proposed video detection lead-in cable. Traffic Operations Division personnel will install interface panel TS-2 Mini-Hub, Mini-Hub Cables, industrial 56k Modem and SDLC Cable. They will also program video detection software after completion of proposed work.

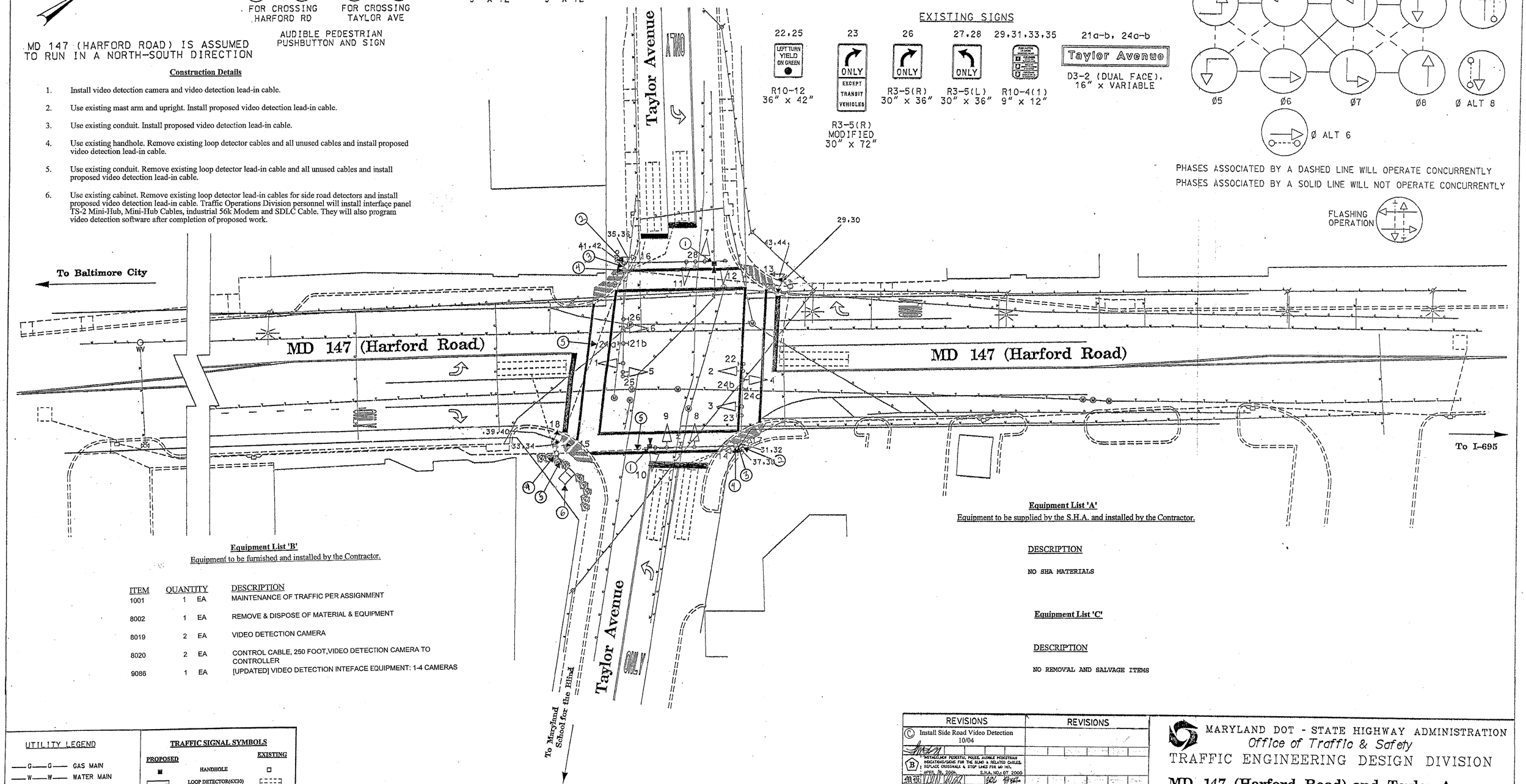

Equipment List 'B'
Equipment to be furnished and installed by the Contractor.

ITEM	QUANTITY		DESCRIPTION
1001	1	EA	MAINTENANCE OF TRAFFIC PER ASSIGNMENT
8002	1	EA	REMOVE & DISPOSE OF MATERIAL & EQUIPMENT
8019	2	EA	VIDEO DETECTION CAMERA
8020	2	EA	CONTROL CABLE, 250 FOOT,VIDEO DETECTION CAMERA TO CONTROLLER
9086	1	EA	[UPDATED] VIDEO DETECTION INTEFACE EQUIPMENT: 1-4 CAMERAS

Equipment List 'A'
Equipment to be supplied by the S.H.A. and installed by the Contractor.

DESCRIPTION

NO SHA MATERIALS

Equipment List 'C'

DESCRIPTION

NO REMOVAL AND SALVAGE ITEMS

UTILITY LEGEND

—G—G—	GAS MAIN
—W—W—	WATER MAIN
—S—S—	SEWER MAIN
—E—E—	ELECTRIC CABLES
—A—A—	AERIAL CABLES
—T—T—	TELEPHONE CABLES
—D—D—	STORM DRAIN

TRAFFIC SIGNAL SYMBOLS

PROPOSED		EXISTING
	HANDHOLE	
	LOOP DETECTOR(6X30)	
	LOOP DETECTOR(6X6)	
	CONDUIT	
	MICRO LOOP PROBE SET	
	ZOOM LENS IMAGE SENSOR	

REVISIONS	REVISIONS
(C) Install Side Road Video Detection 10/04	
(B) INSTALL/MEM PEDESTAL POLES, AUDIBLE PEDESTRIAN INDICATIONS/SIGNS FOR THE BLIND & RELATED CABLES. REPLACE CROSSWALK & STOP LINES FOR MD 147. APRIL 18, 2000 S.H.A. NO.: DT 2000	
(1) ADDENDUM TO B-909-501-477 April 22, 1992	
JJD EMM DAZ ETP TH	
(A) RECONSTRUCT DUE TO MD 147 WIDENING May 26, 1991 S.H.A. No.: B-909-501-477	
JJD EMM	

MARYLAND DOT - STATE HIGHWAY ADMINISTRATION
Office of Traffic & Safety
TRAFFIC ENGINEERING DESIGN DIVISION

MD 147 (Harford Road) and Taylor Avenue

SHA #: BA461A52/052 TOD #: AT308-19

DRAWN BY:	W.R. SMITH	F.A.P. NO.	N/A	TS NO. 2167 (B)	SHEET NO.
CHECKED BY:	S.E.W.	S.H.A. NO.	23854T25028		
SCALE:	1" = 20'	COUNTY:	BALTIMORE	T.I.M.S. NO. E-457	1 OF 2
DATE:	FEBRUARY 12, 1992	LOG MILE:	03014700.16		