EXISTING SIGNS TO BE REMOVED

6a
SCHOOL
36"X36"
36"X12"

PROPOSED SIGNS

5
SCHOOL SPEED LIMIT 35 WHEN FLASHING FINES DOUBLE
FYG
B/W
S5-1
30"X60"
S4-4(1) B/W
30"X15"

6
SCHOOL
S1-1 FYG
36"X36"
S4-3 FYG
36"X12"

7
END SCHOOL ZONE
S5-2 B/W
24"X30"

PROPOSED LED SIGNALS

1,2
Y
12"

NEMA PHASING

FLASHING OPERATION WHEN ACTIVATED

MD 133 IS ASSUMED TO RUN IN A EAST-WEST DIRECTION

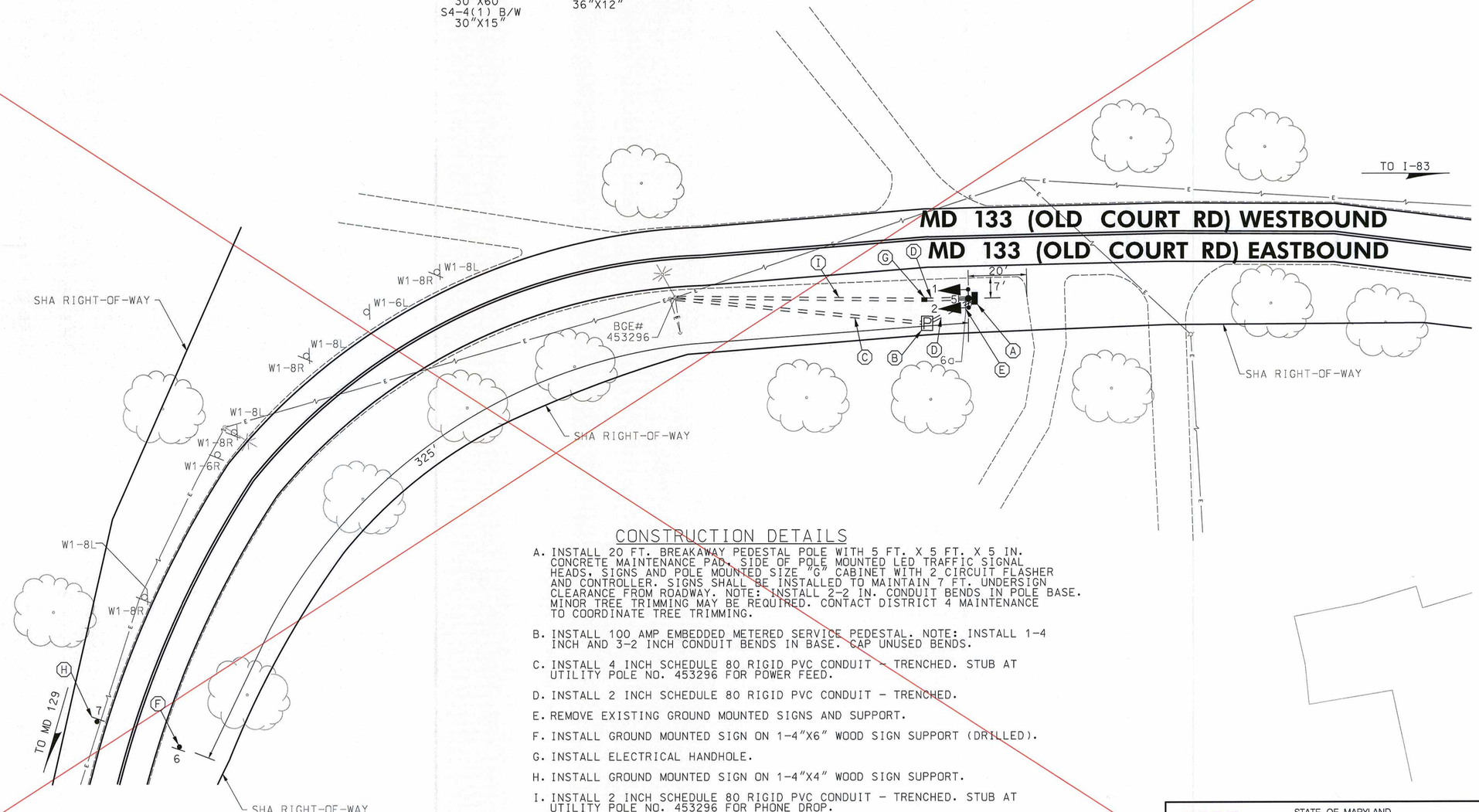

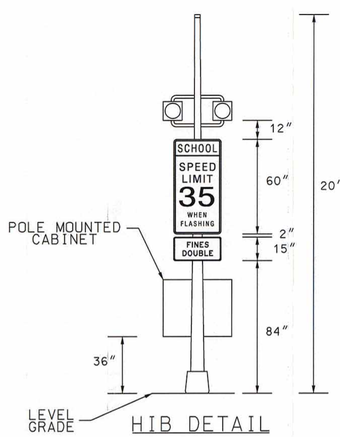

HIB DETAIL

NOT TO SCALE

CONSTRUCTION DETAILS

A. INSTALL 20 FT. BREAKAWAY PEDESTAL POLE WITH 5 FT. X 5 FT. X 5 IN. CONCRETE MAINTENANCE PAD. SIDE OF POLE MOUNTED LED TRAFFIC SIGNAL HEADS, SIGNS AND POLE MOUNTED SIZE "G" CABINET WITH 2 CIRCUIT FLASHER AND CONTROLLER. SIGNS SHALL BE INSTALLED TO MAINTAIN 7 FT. UNDERSIGN CLEARANCE FROM ROADWAY. NOTE: INSTALL 2-2 IN. CONDUIT BENDS IN POLE BASE. MINOR TREE TRIMMING MAY BE REQUIRED. CONTACT DISTRICT 4 MAINTENANCE TO COORDINATE TREE TRIMMING.

B. INSTALL 100 AMP EMBEDDED METERED SERVICE PEDESTAL. NOTE: INSTALL 1-4 INCH AND 3-2 INCH CONDUIT BENDS IN BASE. CAP UNUSED BENDS.

C. INSTALL 4 INCH SCHEDULE 80 RIGID PVC CONDUIT - TRENCHED. STUB AT UTILITY POLE NO. 453296 FOR POWER FEED.

D. INSTALL 2 INCH SCHEDULE 80 RIGID PVC CONDUIT - TRENCHED.

E. REMOVE EXISTING GROUND MOUNTED SIGNS AND SUPPORT.

F. INSTALL GROUND MOUNTED SIGN ON 1-4"X6" WOOD SIGN SUPPORT (DRILLED).

G. INSTALL ELECTRICAL HANDHOLE.

H. INSTALL GROUND MOUNTED SIGN ON 1-4"X4" WOOD SIGN SUPPORT.

I. INSTALL 2 INCH SCHEDULE 80 RIGID PVC CONDUIT - TRENCHED. STUB AT UTILITY POLE NO. 453296 FOR PHONE DROP.

1 REDLINE NO. 1
06/2013
DELETE SHEET

GEOMETRIC LEGEND
EXISTING
PROPOSED

UTILITY LEGEND
SD — STORM DRAIN
G — GAS MAIN
W — WATER MAIN
S — SEWER MAIN
E — ELECTRIC CABLES
A — AERIAL CABLES
T — TELEPHONE CABLES
F — FIBER-OPTIC

BY: BJG

RK&K
Rummel, Klepper & Kahl, LLP
81 MOSHER STREET | BALTIMORE, MD 21217
PH: (410) 728-2900 FAX: (410) 728-3160
Engineers Construction Managers Planners Scientists
www.rkk.com

APPROVALS	REVISIONS
TEAM LEADER	
ASST. DIV. CHIEF	
DIVISION CHIEF	
OFFICE DIRECTOR	

STATE OF MARYLAND
DEPARTMENT OF TRANSPORTATION
STATE HIGHWAY ADMINISTRATION
OFFICE OF TRAFFIC & SAFETY
TRAFFIC ENGINEERING DESIGN DIVISION

MD 133 (OLD COURT ROAD) EB AT WEST OF PARK SCHOOL DRIVE
PIKESVILLE, MARYLAND

TRAFFIC SIGNAL PLAN

SCALE 1"=20' DATE MAY 2013 CONTRACT NO. XY1375185

DESIGNED BY GS
DRAWN BY GS
CHECKED BY BJG
FAP NO.
COUNTY BALTIMORE
LOGMILE 03013302.82
TIMS NO. L862
TOD NO.

TS NO. 4913 DRAWING SP-1 OF 3 SHEET NO. 1 OF 3

PLOTTED: Thursday, June 13, 2013 AT 08:23 AM
FILE: \\balsrv03\v2008\2008\08148_toddes\Task 177_MD 133 HIB\CADD\pSG-0001_MD133@Park School Dr_Deleted.dgn