WIRING DIAGRAM

MD 122 AND WHITEHEAD ROAD

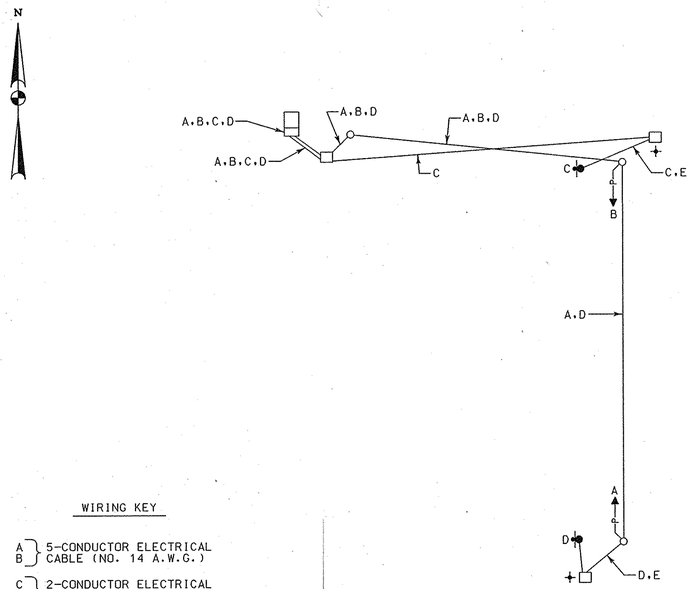

WIRING KEY

A, B } 5-CONDUCTOR ELECTRICAL CABLE (NO. 14 A.W.G.)

C, D } 2-CONDUCTOR ELECTRICAL CABLE (NO. 14 A.W.G.)

E } STRANDED BARE COPPER GROUND WIRE (NO. 6 A.W.G.)

+ - 3/4 IN. X 10 FT. GROUND ROD

MD 122 AND WOODLAWN DRIVE

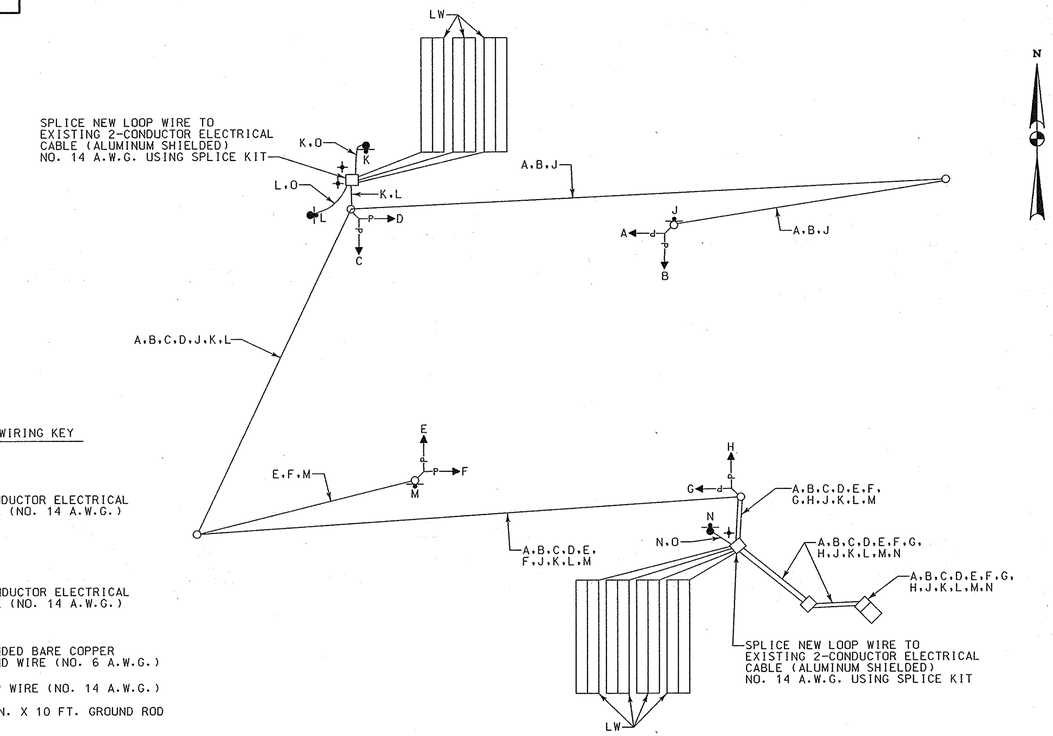

WIRING KEY

A, B, C, D, E, F, G, H } 5-CONDUCTOR ELECTRICAL CABLE (NO. 14 A.W.G.)

J, K, L, M, N } 2-CONDUCTOR ELECTRICAL CABLE (NO. 14 A.W.G.)

O } STRANDED BARE COPPER GROUND WIRE (NO. 6 A.W.G.)

LW - LOOP WIRE (NO. 14 A.W.G.)

+ - 3/4 IN. X 10 FT. GROUND ROD

MD 122 AND GWYNN OAK AVENUE

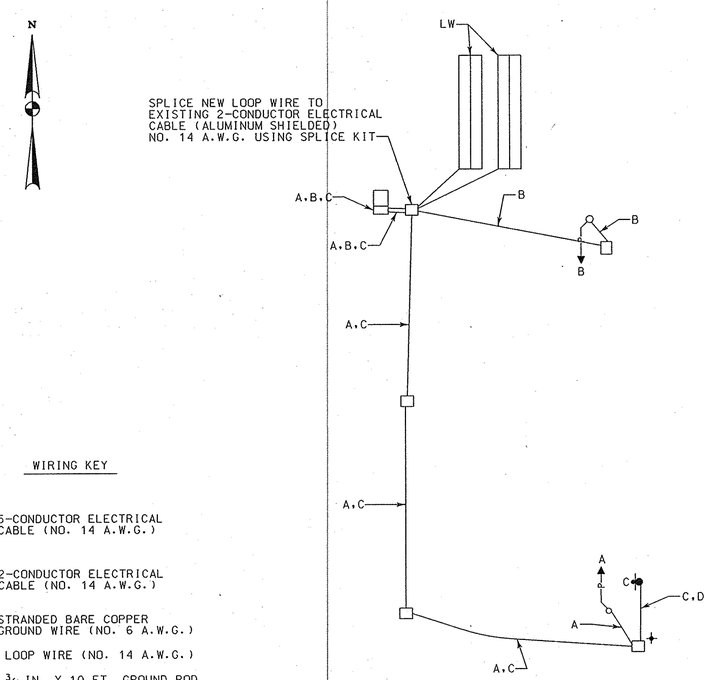

WIRING KEY

A, B } 5-CONDUCTOR ELECTRICAL CABLE (NO. 14 A.W.G.)

C } 2-CONDUCTOR ELECTRICAL CABLE (NO. 14 A.W.G.)

D } STRANDED BARE COPPER GROUND WIRE (NO. 6 A.W.G.)

LW - LOOP WIRE (NO. 14 A.W.G.)

+ - 3/4 IN. X 10 FT. GROUND ROD

MD 122 AND E. PERIMETER BLVD.

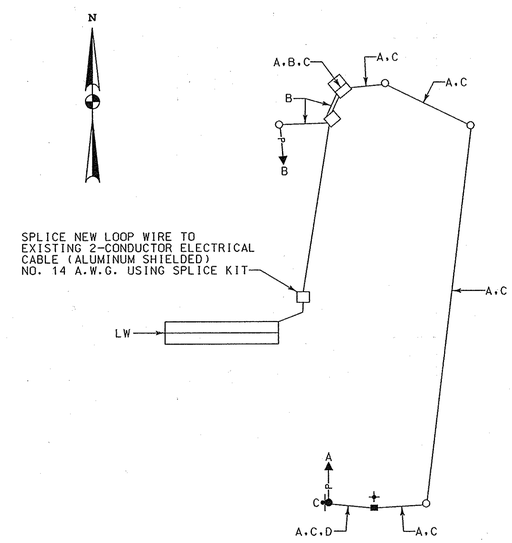

WIRING KEY

A, B } 5-CONDUCTOR ELECTRICAL CABLE (NO. 14 A.W.G.)

C } 2-CONDUCTOR ELECTRICAL CABLE (NO. 14 A.W.G.)

D } STRANDED BARE COPPER GROUND WIRE (NO. 6 A.W.G.)

LW - LOOP WIRE (NO. 14 A.W.G.)

+ - 3/4 IN. X 10 FT. GROUND ROD

BY: sbloss

SHA

STATE OF MARYLAND
DEPARTMENT OF TRANSPORTATION
STATE HIGHWAY ADMINISTRATION

OFFICE OF TRAFFIC & SAFETY
TRAFFIC ENGINEERING DESIGN DIVISION

MD 122 (Security Boulevard) Intersections

GENERAL INFORMATION SHEET

SCALE NONE	DATE 4/20/2007	CONTRACT NO. AX1795133	
DESIGNED BY S. Bloss		COUNTY Baltimore	
DRAWN BY S. Bloss		LOGMILE	
CHECKED BY N. Leary		TIMS NO. ~~E440~~ I 453	
FAP NO.		TOD NO.	
TS NO.	DRAWING TSP-5 -	OF	SHEET NO. 5 OF 6

WR&A

Whitman, Requardt and Associates, LLP
Engineers, Architects and Planners

801 South Caroline Street
Baltimore, Maryland 21231
410-235-3450

PLOTTED: 04-30-2007
FILE: n:\31556-101\cadd\pSG-N005_md122.dgn