EXISTING SIGNALS AND SIGNS TO BE REMOVED OR RELOCATED

MD 26 IS ASSUMED TO RUN
IN AN EAST-WEST DIRECTION

1-4

5,7

S4-4(1)

36" X 36"

6,8

S1-1

36" X 36" PENTAGON

9

R2-1

24" X 30"

PROPOSED SIGNS AND SIGNALS

16,17

11,13

S5-1

30" X 60"

10,12

30" X 18"
BLACK LEGEND ON
WHITE BACKGROUND

14,15

S5-2

24" X 30"

REMOVE 7
RELOCATE 8
INSTALL 12, 13

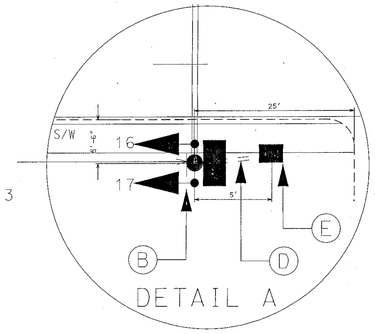

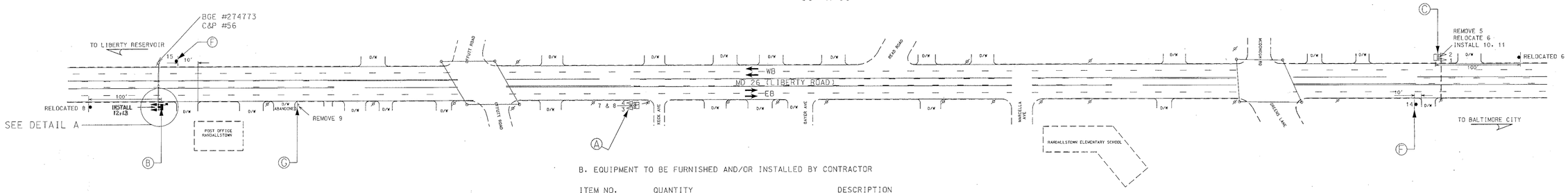

PROJECT DESCRIPTION

GENERAL

THIS PROJECT INVOLVES THE MODIFICATION OF THE EXISTING HAZARD INDENTIFICATION BEACONS (H.I.B.'s) ALONG MD 26 EAST AND WEST OF RANDALLSTOWN ELEMENTARY SCHOOL IN BALTIMORE COUNTY.

THE H.I.B. ALONG MD 26 WB REQUIRES A SIGNING MODIFICATION. THE H.I.B ALONG MD 26 EB WILL BE RELOCATED WEST OF OFFUTT ROAD AND REQUIRES A SIGNING MODIFICATION.

CONSTRUCTION DETAILS

A. REMOVE AND DISPOSE EXISTING 14' BREAKAWAY PEDESTAL POLE, "G" POLE MOUNTED CABINET WITH FLASHER CONTROLLER, TWO 12" SIGNAL HEADS, PHOTOCELL, EXISTING BOTTOM SIGN, EXISTING CONCRETE FOUNDATION AND FOUNDATION BENDS TO 12" BELOW GRADE. RELOCATE EXISTING TOP SIGN TO NEW LOCATION.

B. INSTALL 26' STRAIN POLE, POLE MOUNTED CABINET AND FLASHER CONTROLLER, PHOTOCELL, SIGNAL HEADS, CONTROL AND DISTRIBUTION EQUIPMENT, SIGNS, CONCRETE FOUNDATION WITH 1 - 2" SCHEDULE 80 PVC BEND, AND A 3 FT X 4 FT X 4 IN CONCRETE PAD AS SHOWN IN DETAIL B.

C. REMOVE EXISTING BOTTOM SIGN. RELOCATE EXISTING TOP SIGN TO NEW LOCATION. MODIFY LOCATION OF EXISTING SIGNALS AND SIGNAL ARMS AS SHOWN IN DETAIL C. INSTALL NEW SIGNS ON EXISTING HIB AS SHOWN IN DETAIL C.

D. INSTALL 2" SCHEDULE 80 RIGID PVC ELECTRICAL CONDUIT (TRENCHED).

E. INSTALL NEW HANDHOLE AND GROUND ROD.

F. INSTALL GROUND MOUNTED SIGN ON BREAKAWAY 4" X 6" WOOD POST

G. REMOVE EXISTING GROUND MOUNTED SIGN AND SUPPORT

A. EQUIPMENT TO BE FURNISHED BY STATE HIGHWAY ADMINISTRATION

9062	1 EA	12" x 26' STRAIN POLE (1¾" X 90" ANCHORS INCLUDED)
9076	1 EA	CABINET "G" TYPE POLE MT. WITH FLASHER UNIT
9089	42.5 SF	FLAT SHEET ALUM SIGN-YELLOW, ORANGE, & SILVER (SF)

2 EACH S4-4(1) FINES DOUBLE (30" X 18") - POLE MOUNTED
2 EACH S5-1(1) SCHOOL SPEED LIMIT SIGN "35" (30" X 60") - POLE MOUNTED
2 EACH S5-2 END SCHOOL ZONE SIGN (24" X 30") - GROUND MOUNTED

9097	10 EA	SIGN HARDWARE 24 INCH FORM TUBE

B. EQUIPMENT TO BE FURNISHED AND/OR INSTALLED BY CONTRACTOR

ITEM NO.	QUANTITY	DESCRIPTION
1001	1 EA	MAINTENANCE OF TRAFFIC
2001	1 CY	TEST PIT EXCAVATION
6004	25 SF	4 INCH CONCRETE SIDEWALK
8000	1 EA	TO BE NEGOTIATED - RELOCATE EXISTING SIGNAL HEAD AND SIGNAL ARMS ON EXISTING HIB POLE
8000	18 SF	TO BE NEGOTIATED - RELOCATE SIGN FROM EXISTING OVERHEAD STRUCTURE
8000	1 EA	TO BE NEGOTIATED - REMOVE AND DISPOSE OF EXISTING MATERIAL AND EQUIPMENT PER ASSIGNMENT
8000	62 LF	TO BE NEGOTIATED - FURNISH AND INSTALL WOOD SIGN SUPPORTS 4 INCH X 6 INCH
8000	10 SF	TO BE NEGOTIATED - INSTALL GROUND MOUNTED SIGN
8000	32.5 SF	TO BE NEGOTIATED - INSTALL OVERHEAD SIGN
8000	1 EA	TO BE NEGOTIATED - FURNISH AND INSTALL PHOTOCELL
8000	1 EA	TO BE NEGOTIATED - REMOVE AND DISPOSE OF EXISTING FOUNDATION 12 INCH BELOW GRADE
8006	2 EA	FURNISH AND INSTALL 12 INCH VEHICULAR TRAFFIC SIGNAL HEAD SECTION
8017	1 EA	INSTALL STRAIN POLE (ANY SIZE)
8019	7 LF	FURNISH AND INSTALL 2 INCH SCHEDULE 80 RIGID PVC CONDUIT - TRENCHED
8020	23 LF	FURNISH AND INSTALL 3 INCH ELECTRICAL CONDUIT SCHEDULE 80 PVC RISER
8024	2.62 CY	FURNISH AND INSTALL CONCRETE FOR SIGNAL FOUNDATION
8025	18 LF	FURNISH AND INSTALL NO 6 AWG STRANDED BARE COPPER GROUND WIRE
8034	75 LF	FURNISH AND INSTALL ELECTRICAL CABLE 1 CONDUCTOR - NO. 8 AWG THHN/THWN
8035	1 EA	FURNISH AND INSTALL ELECTRICAL HANDHOLE
8039	2 EA	FURNISH AND INSTALL CONNECTOR KIT - TYPE 2
8040	1 EA	FURNISH AND INSTALL GROUND ROD - 3/4 INCH DIAMETER X 10 FOOT LENGTH
8041	1 EA	FURNISH AND INSTALL CONTROL AND DISTRIBUTION EQUIPMENT (120/240V, 1 PHASE 3 WIRE SYSTEM)
8042	45 LF	FURNISH AND INSTALL ELECTRICAL CABLE - 3 CONDUCTOR (NO. 14 AWG)
8050	1 EA	INSTALL CONTROLLER AND CABINET - POLE MOUNT

DETAIL B

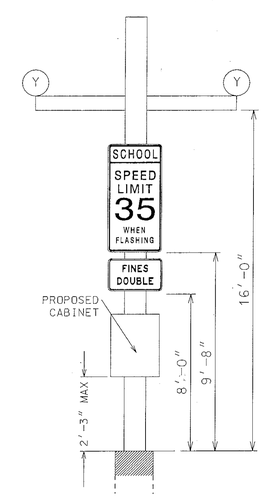

DETAIL C

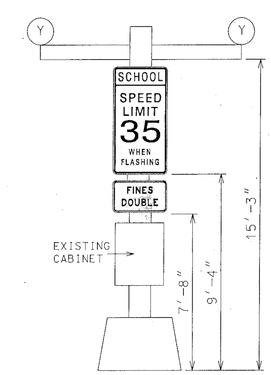

WIRING DIAGRAM

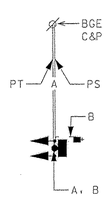

A = 1-CONDUCTOR CABLE (NO. 8 AWG) - 3 TIMES - FOR SERVICE
B = NO. 6 STRANDED BARE COPPER GROUND WIRE
PS = PROPOSED AERIAL ELECTRICAL SERVICE
PT = PROPOSED AERIAL TELEPHONE DROP
+ = GROUND ROD

REVISIONS	APPROVALS
	12-2-99 TEAM LEADER, TRAFFIC ENGINEERING DESIGN DIVISION
	12/2/99 ASST. CHIEF TRAFFIC ENGINEERING DESIGN DIVISION
	12-2-99 CHIEF, TRAFFIC ENGINEERING DESIGN DIVISION
	12/3/99 DIRECTOR, TRAFFIC & SAFETY

MARYLAND DOT - STATE HIGHWAY ADMINISTRATION
Office of Traffic & Safety
TRAFFIC ENGINEERING DESIGN DIVISION

MD 26 AND RANDALLSTOWN ELEMENTARY SCHOOL

SCHOOL H.I.B.'s

DATE 11-1999

DRAWN BY:	M. SUENNEN	F.A.P. NO.	AC-STPG-000S(685)E	TS NO. 3977	SHEET NO.
CHECKED BY:	R. PATEL	S.H.A. NO.	23855125083OLa		
SCALE:	NO SCALE	COUNTY:	BALTIMORE	T.I.M.S. NO. D487	1 OF 1
DATE:	11-15-1999	LOG MILE:	03002605.30		