Maryland Department of Transportation

State Highway Administration
Baltimore, Maryland
Invitation for Bids

Contract No. AX6895168

F.A.P No. ES-000A(428)E

ECONOMIC RECOVERY PROJECT

Upgrade Existing Traffic Barrier and Install New Median Barrier In District 1

Area Wide

Minority Business Enterprises are encouraged to respond to this Solicitation Notice.

The State Highway Administration will only be responsible for the completeness of documents obtained directly from the State Highway Administration Cashier's Office.
Failure to attach all addenda may cause the bid to be irregular.

VENDOR I.D. NUMBER

_____

S.H.A. USE ONLY

Maryland Department of Transportation

State Highway Administration
Baltimore, Maryland
Invitation for Bids

Contract No. AX6895168

F.A.P No. ES-000A(428)E

ECONOMIC RECOVERY PROJECT

Upgrade Existing Traffic Barrier and Install New Median Barrier In District 1

Area Wide

NOTICE TO BIDDERS

No "Pre-Bidding Session" necessary for this project.

SPECIAL NOTICE TO CONTRACTORS

Funding for this project is contingent on the passage of a federal infrastructure stimulus bill. Award of this contract will be conditioned upon the availability of federal funds and the ability of this contract to meet any special requirements of the final authorization bill. If either of these conditions cannot be met, the project may be cancelled.

Where Contract No. AX6895132 appears in the Contract Documents; it shall be Construed as AX6895168.

N

PROJECT ROADWAYS

COUNTY	ROUTE
DORCHESTER	US 50
SOMERSET	US13
WICOMICO	US 50
WICOMICO	US 13
WORCESTER	US 13
WORCESTER	US 50
WORCESTER	US 113

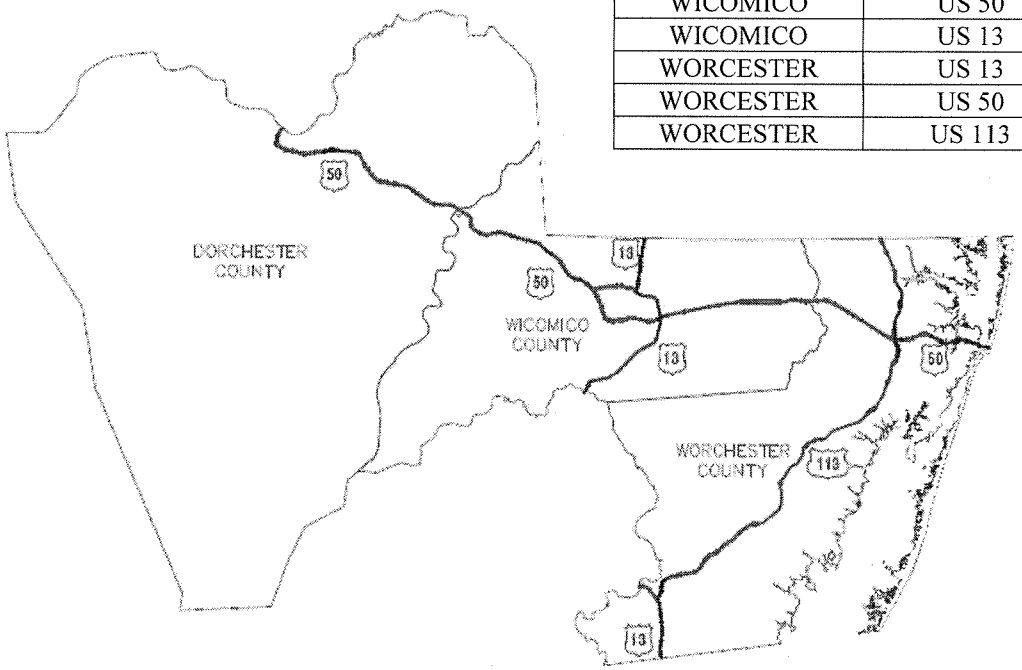

SCALE: NONE LOCATION MAP AREAWIDE DISTRICT 1

"I/We hereby certify that any clearing, grading construction and/or development will be done pursuant to this plan and that any responsible personnel involved in the construction project will have a certificate of attendance at a Maryland Department of the Environment approved training program for the control of erosion and sediment before beginning the project."

"I hereby authorize the right of entry for periodic on-site evaluation by State of Maryland, Department of the Environment, compliance inspectors."

REVIEWED AND APPROVAL RECOMMENDED

DIVISION CHIEF

APPROVAL RECOMMENDED

DIRECTOR FOR OFFICE OF HIGHWAY DEVELOPMENT

APPROVED

DEPUTY ADMINISTRATOR/CHIEF ENGINEER FOR PLANNING, ENGINEERING, REAL ESTATE, AND ENVIRONMENT

TABLE OF CONTENTS

Invitation for Bids.....Cover

Notice To Contractors - Pre-Bidding Session i

Stimulus Project Special Notice to Contractors..... ii

Location and Signature Sheet for District 1 iii

Table of Contents..... iv

CONTRACT PROVISIONS

CP - National Cooperative Highway Research Program (NCHRP)
Report 350 Implementation Schedule 1

CP - Occupying Wetlands 3

CP - Form FHWA 1273.....4

CP - Affirmative Action Requirements
Utilization Of Disadvantaged Business Enterprises
For Federal-Aid Contracts 14

CP - MBE/DBE Compliance Field Meeting 24

CP - Traffic Control Plan Certification 25

CP - Prevailing Wage Instructions
For The Contractor 26

CP - District 1 - Dorchester, Somerset, Wicomico
and Worcester Counties Wage Determinations 29

CP Notice Of Actions For Affirmative Action
Ensure Equal Employment Opportunity (Executive Order 11246) 32

CP - Training Provisions 40

CP - High Visibility Safety Apparel Policy.....44

SPECIAL PROVISIONS

“SP - Project Description, Specifications and Employment Agency” 46

SP - Notice to Contractor.....48

TABLE OF CONTENTS

SP - Notice to Contractor.....51

TERMS AND CONDITIONS

SP - Section 4 - Control of Work
TC - 4.02 Failure to Adequately Maintain Project.....52

CATEGORY 100 PRELIMINARY

SPI Section 103 - Engineers Office.....53

SP - Section 104 - Maintenance of Traffic
104.01 - Traffic Control Plan (TCP).....55

CATEGORY 200 GRADING

SP Section 203 - Borrow Excavation
203.01.02 Notice to Contractor - Borrow Pits.....58

CATEGORY 300 DRAINAGE

SP - Section 308 - Erosion and Sediment Control
Sequence of Construction.....61

SP - Section 308 - Erosion and Sediment Control
For all projects without plans.....62

SP-Section 308-Erosion and Sediment Control
308.01.04 Incentive/Liquidated Damages Payments.....65

TABLE OF CONTENTS

CATEGORY 600 SHOULDERS

SP - Section 605.03 - Modify Existing Traffic Barrier 66

CATEGORY 875 UTILITIES

SP-Section 875-Utility Statement.....67

CATEGORY 900 MATERIALS

SPI-Section 916 - Soil and Soil-Aggregate Borrow 70

Detail Drawings 71

DETAIL SHEETS

PROPOSAL FORM PACKET

Detail Drawings 77

CP Proposal Form Packet - Federal.....80

CP Subcontracting 116

NOTICE TO ALL HOLDERS OF THIS CONTRACT DOCUMENT

NATIONAL COOPERATIVE HIGHWAY RESEARCH PROGRAM (NCHRP) REPORT 350 IMPLEMENTATION SCHEDULE FOR DEVICES USED IN THE MAINTENANCE OF TRAFFIC

Except as otherwise specified in this Section, all items for the maintenance of traffic, including those listed under the following categories, shall be crashworthy in conformance with Level 3 or other Level as specified by the Engineer in conformance with the safety crash testing and performance criteria published in the National Cooperative Highway Research Program (NCHRP) Report 350, "Recommended Procedures for the Safety Performance Evaluation of Highway Features." When conformance with NCHRP Report 350 is required, the Contractor shall provide the Engineer with the manufacturers' certifications that the devices comply with the specified criteria.

Unless specifically waived by an attachment to these Contract Provisions, devices must be approved by the Office of Traffic and Safety.

Category 1 Devices

These devices are cones, tubular markers, flexible delineator posts, and drums, all without any accessories or attachments, which are used for channelization and delineation.

Category 2 Devices

These devices are Type I, II, and III barricades; portable sign supports with signs; intrusion alarms; and drums, vertical panels, and cones, all with accessories or attachments.

Category 3 Devices

(a) Truck Mounted Attenuators (TMAs).

(b) Temporary Barrier.

(1) Concrete Barrier.

(2) Traffic Barrier W Beam and Water Filled Barrier.

(c) Temporary End Treatments.

Category 4 Devices

These devices are area lighting supports, arrow panels, and portable variable message signs that are usually portable or trailer-mounted.

WORK ZONE DEVICES	IMPLEMENTATION SCHEDULE TO CONFORM TO NCHRP REPORT 350 CRITERIA
CATEGORY 1 Cones, tubular markers, flexible delineator posts, and drums (all without any accessories or attachments)	All devices shall conform to NCHRP Report 350 criteria.
CATEGORY 2 Type I, II, and III barricades; portable signs supports with signs; intrusion alarms; and drums, vertical panels, and cones (all with accessories or attachments)	All devices shall conform to NCHRP Report 350 criteria.
CATEGORY 3 (a) Truck Mounted Attenuators (TMA) (b) Temporary Barriers (1) Concrete Barrier (2) Traffic Barrier W Beam and Water Filled Barrier (c) Temporary End Treatments	All devices shall conform to NCHRP Report 350 criteria.
CATEGORY 4 Portable trailer mounted devices including area lighting supports, arrow panels, and changeable message signs	The Contractor may use devices that do not conform to NCHRP Report 350 criteria, until compliance dates are established. Use of these devices shall comply with the provisions of Part 6 of the MUTCD.

OCCUPYING WETLANDS

The Contractor is hereby alerted to the importance of preserving wetland areas. The Administration, in conjunction with the various environmental agencies, has developed these Contract Documents so as to minimize or eliminate disturbance and damage to existing wetland areas. In order to accomplish this, the following must be rigidly adhered to:

(a) Prior to performing any work on the project, the areas of wetland will be identified and marked as directed by the Administration. All personnel of the Contractor or sub-contractors shall be alerted to these designated areas.

(b) The Contractor or sub-contractors shall not impact any wetland or waterway, whether it be permanently or temporarily unless otherwise stipulated in the permit application and approved as an authorized action by the appropriate regulatory agency. No fill shall be placed in these areas without a permit.

(c) If a Contractor or sub-contractor has to impact a wetland or waterway that is not covered by an existing wetland permit, they shall immediately notify the Engineer. The Engineer will notify the Environmental Programs Division to determine the extent of any permit modification. At that time the Environmental Programs Division will request a permit modification or submit a permit application.

(d) If the Contractor impacts any wetland or waterway for which they do not have a wetland permit, they shall be responsible for restoring the wetland areas and possibly mitigating the wetland impacts to the full satisfaction of the environmental agencies, which could include monetary compensation.

(e) The cost of restoration and mitigation of the impacted areas shall be at no additional cost to the Administration.

The importance of not abusing the wetland areas cannot be overemphasized. Abuse of wetland areas could jeopardize the operation of the total Contract and could be cause for a shut-down. If a shut-down occurs because of the Contractor's failure to secure the required permits (i.e. the Contractor’s method of work includes impacts not approved by previously acquired permits), the Contractor’s negligence or operations, all costs and damages to the Contractor and to the State will be at no additional cost to the Administration. Noncompliance with these requirements will not be considered for an extension of Contract time.

REQUIRED CONTRACT PROVISIONS
FEDERAL-AID CONSTRUCTION CONTRACTS

		Page
I.	General	1
II.	Nondiscrimination	1
III.	Nonsegregated Facilities	3
IV.	Payment of Predetermined Minimum Wage	3
V.	Statements and Payrolls	6
VI.	Record of Materials, Supplies, and Labor	6
VII.	Subletting or Assigning the Contract	7
VIII.	Safety: Accident Prevention	7
IX.	False Statements Concerning Highway Projects	7
X.	Implementation of Clean Air Act and Federal Water Pollution Control Act	8
XI.	Certification Regarding Debarment, Suspension, Ineligibility, and Voluntary Exclusion	8
XII.	Certification Regarding Use of Contract Funds for Lobbying	9

ATTACHMENTS

A. Employment Preference for Appalachian Contracts (included in Appalachian contracts only)

I. GENERAL

1. These contract provisions shall apply to all work performed on the contract by the contractor's own organization and with the assistance of workers under the contractor's immediate superintendence and to all work performed on the contract by piecework, station work, or by subcontract.

2. Except as otherwise provided for in each section, the contractor shall insert in each subcontract all of the stipulations contained in these Required Contract Provisions, and further require their inclusion in any lower tier subcontract or purchase order that may in turn be made. The Required Contract Provisions shall not be incorporated by reference in any case. The prime contractor shall be responsible for compliance by any subcontractor or lower tier subcontractor with these Required Contract Provisions.

3. A breach of any of the stipulations contained in these Required Contract Provisions shall be sufficient grounds for termination of the contract.

4. A breach of the following clauses of the Required Contract Provisions may also be grounds for debarment as provided in 29 CFR 5.12:

Section I, paragraph 2;
Section IV, paragraphs 1, 2, 3, 4, and 7;
Section V, paragraphs 1 and 2a through 2g.

5. Disputes arising out of the labor standards provisions of Section IV (except paragraph 5) and Section V of these Required Contract Provisions shall not be subject to the general disputes clause of this contract. Such disputes shall be resolved in accordance with the procedures of the U.S. Department of Labor (DOL) as set forth in 29 CFR 5, 6, and 7. Disputes within the meaning of this clause include disputes between the contractor (or any of its subcontractors) and the contracting agency, the DOL, or the contractor's employees or their representatives.

6. **Selection of Labor:** During the performance of this contract, the contractor shall not:

a. discriminate against labor from any other State, possession, or territory of the United States (except for employment preference for Appalachian contracts, when applicable, as specified in Attachment A), or

b. employ convict labor for any purpose within the limits of the project unless it is labor performed by convicts who are on parole, supervised release, or probation.

II. NONDISCRIMINATION

(Applicable to all Federal-aid construction contracts and to all related subcontracts of $10,000 or more.)

1. **Equal Employment Opportunity:** Equal employment opportunity (EEO) requirements not to discriminate and to take affirmative action to assure equal opportunity as set forth under laws, executive orders, rules, regulations (28 CFR 35, 29 CFR 1630 and 41 CFR 60) and orders of the Secretary of Labor as modified by the provisions prescribed herein, and imposed pursuant to 23 U.S.C. 140 shall constitute the EEO and specific affirmative action standards for the contractor's project activities under this contract. The Equal Opportunity Construction Contract Specifications set forth under 41 CFR 60-4.3 and the provisions of the American Disabilities Act of 1990 (42 U.S.C. 12101 et seq.) set forth under 28 CFR 35 and 29 CFR 1630 are incorporated by reference in this contract. In the execution of this contract, the contractor agrees to comply with the following minimum specific requirement activities of EEO:

a. The contractor will work with the State highway agency (SHA) and the Federal Government in carrying out EEO obligations and in their review of his/her activities under the contract.

b. The contractor will accept as his operating policy the following statement:

> "It is the policy of this Company to assure that applicants are employed, and that employees are treated during employment, without regard to their race, religion, sex, color, national origin, age or disability. Such action shall include: employment, upgrading, demotion, or transfer; recruitment or recruitment advertising; layoff or termination; rates of pay or other forms of compensation; and selection for training, including apprenticeship, preapprenticeship, and/or on-the-job training."

2. **EEO Officer:** The contractor will designate and make known to the SHA contracting officers an EEO Officer who will have the responsibility for and must be capable of effectively administering and promoting an active contractor program of EEO and who must be assigned adequate authority and responsibility to do so.

3. **Dissemination of Policy:** All members of the contractor's staff who are authorized to hire, supervise, promote, and discharge employees, or who recommend such action, or who are substantially involved in such action, will be made fully cognizant of, and will implement, the contractor's EEO policy and contractual responsibilities to provide EEO in each grade and classification of employment. To ensure that the above agreement will be met, the following actions will be taken as a minimum:

a. Periodic meetings of supervisory and personnel office employees will be conducted before the start of work and then not less often than once every six months, at which time the contractor's EEO policy and its implementation will be reviewed and explained. The meetings will be conducted by the EEO Officer.

b. All new supervisory or personnel office employees will be given a thorough indoctrination by the EEO Officer, covering all major aspects of the contractor's EEO obligations within thirty days following their reporting for duty with the contractor.

c. All personnel who are engaged in direct recruitment for the project will be instructed by the EEO Officer in the contractor's procedures for locating and hiring minority group employees.

d. Notices and posters setting forth the contractor's EEO policy will be placed in areas readily accessible to employees, applicants for employment and potential employees.

e. The contractor's EEO policy and the procedures to implement such policy will be brought to the attention of employees by means of meetings, employee handbooks, or other appropriate means.

4. **Recruitment:** When advertising for employees, the contractor will include in all advertisements for employees the notation: "An Equal Opportunity Employer." All such advertisements will be placed in publications having a large circulation among minority groups in the area from which the project work force would normally be derived.

a. The contractor will, unless precluded by a valid bargaining agreement, conduct systematic and direct recruitment through public and private employee referral sources likely to yield qualified minority group applicants. To meet this requirement, the contractor will identify sources of potential minority group employees, and establish with such identified sources procedures whereby minority group applicants may be referred to the contractor for employment consideration.

b. In the event the contractor has a valid bargaining agreement providing for exclusive hiring hall referrals, he is expected to observe the provisions of that agreement to the extent that the system permits the contractor's compliance with EEO contract provisions. (The DOL has held that where implementation of such agreements have the effect of discriminating against minorities or women, or obligates the contractor to do the same, such implementation violates Executive Order 11246, as amended.)

c. The contractor will encourage his present employees to refer minority group applicants for employment. Information and procedures with regard to referring minority group applicants will be discussed with employees.

5. **Personnel Actions:** Wages, working conditions, and employee benefits shall be established and administered, and personnel actions of every type, including hiring, upgrading, promotion, transfer, demotion, layoff, and termination, shall be taken without regard to race, color, religion, sex, national origin, age or disability. The following procedures shall be followed:

a. The contractor will conduct periodic inspections of project sites to insure that working conditions and employee facilities do not indicate discriminatory treatment of project site personnel.

b. The contractor will periodically evaluate the spread of wages paid within each classification to determine any evidence of discriminatory wage practices.

c. The contractor will periodically review selected personnel actions in depth to determine whether there is evidence of discrimination. Where evidence is found, the contractor will promptly take corrective action. If the review indicates that the discrimination may extend beyond the actions reviewed, such corrective action shall include all affected persons.

d. The contractor will promptly investigate all complaints of alleged discrimination made to the contractor in connection with his obligations under this contract, will attempt to resolve such complaints, and will take appropriate corrective action within a reasonable time. If the investigation indicates that the discrimination may affect persons other than the complainant, such corrective action shall include such other persons. Upon completion of each investigation, the contractor will inform every complainant of all of his avenues of appeal.

6. **Training and Promotion:**

a. The contractor will assist in locating, qualifying, and increasing the skills of minority group and women employees, and applicants for employment.

b. Consistent with the contractor's work force requirements and as permissible under Federal and State regulations, the contractor shall make full use of training programs, i.e., apprenticeship, and on-the-job training programs for the geographical area of contract performance. Where feasible, 25 percent of apprentices or trainees in each occupation shall be in their first year of apprenticeship or training. In the event a special provision for training is provided under this contract, this subparagraph will be superseded as indicated in the special provision.

c. The contractor will advise employees and applicants for employment of available training programs and entrance requirements for each.

d. The contractor will periodically review the training and promotion potential of minority group and women employees and will encourage eligible employees to apply for such training and promotion.

7. **Unions:** If the contractor relies in whole or in part upon unions as a source of employees, the contractor will use his/her best efforts to obtain the cooperation of such unions to increase opportunities for minority groups and women within the unions, and to effect referrals by such unions of minority and female employees. Actions by the contractor either directly or through a contractor's association acting as agent will include the procedures set forth below:

a. The contractor will use best efforts to develop, in cooperation with the unions, joint training programs aimed toward qualifying more minority group members and women for membership in the unions and increasing the skills of minority group employees and women so that they may qualify for higher paying employment.

b. The contractor will use best efforts to incorporate an EEO clause into each union agreement to the end that such union will be contractually bound to refer applicants without regard to their race, color, religion, sex, national origin, age or disability.

c. The contractor is to obtain information as to the referral practices and policies of the labor union except that to the extent such information is within the exclusive possession of the labor union and such labor union refuses to furnish such information to the contractor, the contractor shall so certify to the SHA and shall set forth what efforts have been made to obtain such information.

d. In the event the union is unable to provide the contractor with a reasonable flow of minority and women referrals within the time limit set forth in the collective bargaining agreement, the contractor will, through independent recruitment efforts, fill the employment vacancies without regard to race, color, religion, sex, national origin, age or disability; making full efforts to obtain qualified and/or qualifiable minority group persons and women. (The DOL has held that it shall be no excuse that the union with which the contractor has a collective bargaining agreement providing for exclusive referral failed to refer minority employees.) In the event the union referral practice prevents the contractor from meeting the obligations pursuant to Executive Order 11246, as amended, and these special provisions, such contractor shall immediately notify the SHA.

8. **Selection of Subcontractors, Procurement of Materials and Leasing of Equipment:** The contractor shall not discriminate on the grounds of race, color, religion, sex, national origin, age or disability in the selection and retention of subcontractors, including procurement of materials and leases of equipment.

a. The contractor shall notify all potential subcontractors and suppliers of his/her EEO obligations under this contract.

b. Disadvantaged business enterprises (DBE), as defined in 49 CFR 23, shall have equal opportunity to compete for and perform subcontracts which the contractor enters into pursuant to this contract. The contractor will use his best efforts to solicit bids from and to utilize DBE subcontractors or subcontractors with meaningful minority group and female representation among their employees. Contractors shall obtain lists of DBE construction firms from SHA personnel.

c. The contractor will use his best efforts to ensure subcontractor compliance with their EEO obligations.

9. **Records and Reports:** The contractor shall keep such records as necessary to document compliance with the EEO requirements. Such records shall be retained for a period of three years following completion of the contract work and shall be available at reasonable times and places for inspection by authorized representatives of the SHA and the FHWA.

a. The records kept by the contractor shall document the following:

(1) The number of minority and non-minority group members and women employed in each work classification on the project;

(2) The progress and efforts being made in cooperation with unions, when applicable, to increase employment opportunities for minorities and women;

(3) The progress and efforts being made in locating, hiring, training, qualifying, and upgrading minority and female employees; and

(4) The progress and efforts being made in securing the services of DBE subcontractors or subcontractors with meaningful minority and female representation among their employees.

b. The contractors will submit an annual report to the SHA each July for the duration of the project, indicating the number of minority, women, and non-minority group employees currently engaged in each work classification required by the contract work. This information is to be reported on Form FHWA-1391. If on-thejob training is being required by special provision, the contractor will be required to collect and report training data.

III. NONSEGREGATED FACILITIES

(Applicable to all Federal-aid construction contracts and to all related subcontracts of $10,000 or more.)

a. By submission of this bid, the execution of this contract or subcontract, or the consummation of this material supply agreement or purchase order, as appropriate, the bidder, Federal-aid construction contractor, subcontractor, material supplier, or vendor, as appropriate, certifies that the firm does not maintain or provide for its employees any segregated facilities at any of its establishments, and that the firm does not permit its employees to perform their services at any location, under its control, where segregated facilities are maintained. The firm agrees that a breach of this certification is a violation of the EEO provisions of this contract. The firm further certifies that no employee will be denied access to adequate facilities on the basis of sex or disability.

b. As used in this certification, the term "segregated facilities" means any waiting rooms, work areas, restrooms and washrooms, restaurants and other eating areas, timeclocks, locker rooms, and other storage or dressing areas, parking lots, drinking fountains, recreation or entertainment areas, transportation, and housing facilities provided for employees which are segregated by explicit directive, or are, in fact, segregated on the basis of race, color, religion, national origin, age or disability, because of habit, local custom, or otherwise. The only exception will be for the disabled when the demands for accessibility override (e.g. disabled parking).

c. The contractor agrees that it has obtained or will obtain identical certification from proposed subcontractors or material suppliers prior to award of subcontracts or consummation of material supply agreements of $10,000 or more and that it will retain such certifications in its files.

IV. PAYMENT OF PREDETERMINED MINIMUM WAGE

(Applicable to all Federal-aid construction contracts exceeding $2,000 and to all related subcontracts, except for projects located on roadways classified as local roads or rural minor collectors, which are exempt.)

1. **General:**

a. All mechanics and laborers employed or working upon the site of the work will be paid unconditionally and not less often than once a week and without subsequent deduction or rebate on any account [except such payroll deductions as are permitted by regulations (29 CFR 3) issued by the Secretary of Labor under the Copeland Act (40 U.S.C. 276c)] the full amounts of wages and bona fide fringe benefits (or cash equivalents thereof) due at time of payment. The payment shall be computed at wage rates not less than those contained in the wage determination of the Secretary of Labor (hereinafter "the wage determination") which is attached hereto and made a part hereof, regardless of any contractual relationship which may be alleged to exist between the contractor or its subcontractors and such laborers and mechanics. The wage determination (including any additional classifications and wage rates conformed under paragraph 2 of this Section IV

and the DOL poster (WH-1321) or Form FHWA-1495) shall be posted at all times by the contractor and its subcontractors at the site of the work in a prominent and accessible place where it can be easily seen by the workers. For the purpose of this Section, contributions made or costs reasonably anticipated for bona fide fringe benefits under Section 1(b)(2) of the Davis-Bacon Act (40 U.S.C. 276a) on behalf of laborers or mechanics are considered wages paid to such laborers or mechanics, subject to the provisions of Section IV, paragraph 3b, hereof. Also, for the purpose of this Section, regular contributions made or costs incurred for more than a weekly period (but not less often than quarterly) under plans, funds, or programs, which cover the particular weekly period, are deemed to be constructively made or incurred during such weekly period. Such laborers and mechanics shall be paid the appropriate wage rate and fringe benefits on the wage determination for the classification of work actually performed, without regard to skill, except as provided in paragraphs 4 and 5 of this Section IV.

b. Laborers or mechanics performing work in more than one classification may be compensated at the rate specified for each classification for the time actually worked therein, provided, that the employer's payroll records accurately set forth the time spent in each classification in which work is performed.

c. All rulings and interpretations of the Davis-Bacon Act and related acts contained in 29 CFR 1, 3, and 5 are herein incorporated by reference in this contract.

2. **Classification:**

a. The SHA contracting officer shall require that any class of laborers or mechanics employed under the contract, which is not listed in the wage determination, shall be classified in conformance with the wage determination.

b. The contracting officer shall approve an additional classification, wage rate and fringe benefits only when the following criteria have been met:

(1) the work to be performed by the additional classification requested is not performed by a classification in the wage determination;

(2) the additional classification is utilized in the area by the construction industry;

(3) the proposed wage rate, including any bona fide fringe benefits, bears a reasonable relationship to the wage rates contained in the wage determination; and

(4) with respect to helpers as defined in Section IV.4(c), when such a classification prevails in the area in which the work is performed.

c. If the contractor or subcontractors, as appropriate, the laborers and mechanics (if known) to be employed in the additional classification or their representatives, and the contracting officer agree on the classification and wage rate (including the amount designated for fringe benefits where appropriate), a report of the action taken shall be sent by the contracting officer to the DOL, Administrator of the Wage and Hour Division, Employment Standards Administration, Washington, D.C. 20210. The Wage and Hour Administrator, or an authorized representative, will approve, modify, or disapprove every additional classification action within 30 days of receipt and so advise the contracting officer or will notify the contracting officer within the 30-day period that additional time is necessary.

d. In the event the contractor or subcontractors, as appropriate, the laborers or mechanics to be employed in the additional classification or their representatives, and the contracting officer do not agree on the proposed classification and wage rate (including the amount designated for fringe benefits, where appropriate), the contracting officer shall refer the questions, including the views of all interested parties and the recommendation of the contracting officer, to the Wage and Hour Administrator for determination. Said Administrator, or an authorized representative, will issue a determination within 30 days of receipt and so advise the contracting officer or will notify the contracting officer within the 30-day period that additional time is necessary

e. The wage rate (including fringe benefits where appropriate) determined pursuant to paragraph 2c or 2d of this Section IV shall be paid to all workers performing work in the additional classification from the first day on which work is performed in the classification.

3. **Payment of Fringe Benefits:**

a. Whenever the minimum wage rate prescribed in the contract for a class of laborers or mechanics includes a fringe benefit which is not expressed as an hourly rate, the contractor or subcontractors, as appropriate, shall either pay the benefit as stated in the wage determination or shall pay another bona fide fringe benefit or an hourly case equivalent thereof.

b. If the contractor or subcontractor, as appropriate, does not make payments to a trustee or other third person, he/she may consider as a part of the wages of any laborer or mechanic the amount of any costs reasonably anticipated in providing bona fide fringe benefits under a plan or program, provided, that the Secretary of Labor has found, upon the written request of the contractor, that the applicable standards of the Davis-Bacon Act have been met. The Secretary of Labor may require the contractor to set aside in a separate account assets for the meeting of obligations under the plan or program.

4. **Apprentices and Trainees (Programs of the U.S. DOL) and Helpers:**

a. Apprentices:

(1) Apprentices will be permitted to work at less than the predetermined rate for the work they performed when they are employed pursuant to and individually registered in a bona fide apprenticeship program registered with the DOL, Employment and Training Administration, Bureau of Apprenticeship and Training, or with a State apprenticeship agency recognized by the Bureau, or if a person is employed in his/her first 90 days of probationary employment as an apprentice in such an apprenticeship program, who is not individually registered in the program, but who has been certified by the Bureau of Apprenticeship and Training or a State apprenticeship agency (where appropriate) to be eligible for probationary employment as an apprentice.

(2) The allowable ratio of apprentices to journeyman-level employees on the job site in any craft classification shall not be greater than the ratio permitted to the contractor as to the entire work force under the registered program. Any employee listed on a payroll at an apprentice wage rate, who is not registered or otherwise employed as stated above, shall be paid not less than the applicable wage rate listed in the wage determination for the classification of work actually performed. In addition, any apprentice performing work on the job site in excess of the ratio permitted under the registered program shall be paid not less than the applicable wage rate on the wage determination for the work

actually performed. Where a contractor or subcontractor is performing construction on a project in a locality other than that in which its program is registered, the ratios and wage rates (expressed in percentages of the journeyman-level hourly rate) specified in the contractor's or subcontractor's registered program shall be observed.

(3) Every apprentice must be paid at not less than the rate specified in the registered program for the apprentice's level of progress, expressed as a percentage of the journeyman-level hourly rate specified in the applicable wage determination. Apprentices shall be paid fringe benefits in accordance with the provisions of the apprenticeship program. If the apprenticeship program does not specify fringe benefits, apprentices must be paid the full amount of fringe benefits listed on the wage determination for the applicable classification. If the Administrator for the Wage and Hour Division determines that a different practice prevails for the applicable apprentice classification, fringes shall be paid in accordance with that determination.

(4) In the event the Bureau of Apprenticeship and Training, or a State apprenticeship agency recognized by the Bureau, withdraws approval of an apprenticeship program, the contractor or subcontractor will no longer be permitted to utilize apprentices at less than the applicable predetermined rate for the comparable work performed by regular employees until an acceptable program is approved.

b. Trainees:

(1) Except as provided in 29 CFR 5.16, trainees will not be permitted to work at less than the predetermined rate for the work performed unless they are employed pursuant to and individually registered in a program which has received prior approval, evidenced by formal certification by the DOL, Employment and Training Administration.

(2) The ratio of trainees to journeyman-level employees on the job site shall not be greater than permitted under the plan approved by the Employment and Training Administration. Any employee listed on the payroll at a trainee rate who is not registered and participating in a training plan approved by the Employment and Training Administration shall be paid not less than the applicable wage rate on the wage determination for the classification of work actually performed. In addition, any trainee performing work on the job site in excess of the ratio permitted under the registered program shall be paid not less than the applicable wage rate on the wage determination for the work actually performed.

(3) Every trainee must be paid at not less than the rate specified in the approved program for his/her level of progress, expressed as a percentage of the journeyman-level hourly rate specified in the applicable wage determination. Trainees shall be paid fringe benefits in accordance with the provisions of the trainee program. If the trainee program does not mention fringe benefits, trainees shall be paid the full amount of fringe benefits listed on the wage determination unless the Administrator of the Wage and Hour Division determines that there is an apprenticeship program associated with the corresponding journeyman-level wage rate on the wage determination which provides for less than full fringe benefits for apprentices, in which case such trainees shall receive the same fringe benefits as apprentices.

(4) In the event the Employment and Training Administration withdraws approval of a training program, the contractor or subcontractor will no longer be permitted to utilize trainees at less than the applicable predetermined rate for the work performed until an acceptable program is approved.

c. Helpers:

Helpers will be permitted to work on a project if the helper classification is specified on an applicable wage determination or is approved pursuant to the conformance procedure set forth in Section IV.2. Any worker listed on a payroll at a helper wage rate, shall be paid not less than the applicable wage rate on the wage determination for the classification of work actually performed.

5. **Apprentices and Trainees (Programs of the U.S. DOT):**

Apprentices and trainees working under apprenticeship and skill training programs which have been certified by the Secretary of Transportation as promoting EEO in connection with Federal-aid highway construction programs are not subject to the requirements of paragraph 4 of this Section IV. The straight time hourly wage rates for apprentices and trainees under such programs will be established by the particular programs. The ratio of apprentices and trainees to journeymen shall not be greater than permitted by the terms of the particular program.

6. **Withholding:**

The SHA shall upon its own action or upon written request of an authorized representative of the DOL withhold, or cause to be withheld, from the contractor or subcontractor under this contract or any other Federal contract with the same prime contractor, or any other Federally-assisted contract subject to Davis-Bacon prevailing wage requirements which is held by the same prime contractor, as much of the accrued payments or advances as may be considered necessary to pay laborers and mechanics, including apprentices, trainees, and helpers, employed by the contractor or any subcontractor the full amount of wages required by the contract. In the event of failure to pay any laborer or mechanic, including any apprentice, trainee, or helper, employed or working on the site of the work, all or part of the wages required by the contract, the SHA contracting officer may, after written notice to the contractor, take such action as may be necessary to cause the suspension of any further payment, advance, or guarantee of funds until such violations have ceased.

7. **Overtime Requirements:**

No contractor or subcontractor contracting for any part of the contract work which may require or involve the employment of laborers, mechanics, watchmen, or guards (including apprentices, trainees, and helpers described in paragraphs 4 and 5 above) shall require or permit any laborer, mechanic, watchman, or guard in any workweek in which he/she is employed on such work, to work in excess of 40 hours in such workweek unless such laborer, mechanic, watchman, or guard receives compensation at a rate not less than one-and-one-half times his/her basic rate of pay for all hours worked in excess of 40 hours in such workweek.

8. **Violation:**

Liability for Unpaid Wages; Liquidated Damages: In the event of any violation of the clause set forth in paragraph 7 above, the contractor and any subcontractor responsible thereof shall be liable to the affected employee for his/her unpaid wages. In addition, such contractor and subcontractor shall be liable to the United States (in the case of work done under contract for the District of Columbia or a territory, to such District or to such territory) for liquidated damages. Such liquidated damages shall be computed with respect to each individual laborer, mechanic, watchman, or guard employed in violation of the clause set forth in paragraph 7, in the sum of $10 for each calendar day on which

such employee was required or permitted to work in excess of the standard work week of 40 hours without payment of the overtime wages required by the clause set forth in paragraph 7.

9. **Withholding for Unpaid Wages and Liquidated Damages:**

The SHA shall upon its own action or upon written request of any authorized representative of the DOL withhold, or cause to be withheld, from any monies payable on account of work performed by the contractor or subcontractor under any such contract or any other Federal contract with the same prime contractor, or any other Federally-assisted contract subject to the Contract Work Hours and Safety Standards Act, which is held by the same prime contractor, such sums as may be determined to be necessary to satisfy any liabilities of such contractor or subcontractor for unpaid wages and liquidated damages as provided in the clause set forth in paragraph 8 above.

V. STATEMENTS AND PAYROLLS

(Applicable to all Federal-aid construction contracts exceeding $2,000 and to all related subcontracts, except for projects located on roadways classified as local roads or rural collectors, which are exempt.)

1. **Compliance with Copeland Regulations (29 CFR 3):**

The contractor shall comply with the Copeland Regulations of the Secretary of Labor which are herein incorporated by reference.

2. **Payrolls and Payroll Records:**

a. Payrolls and basic records relating thereto shall be maintained by the contractor and each subcontractor during the course of the work and preserved for a period of 3 years from the date of completion of the contract for all laborers, mechanics, apprentices, trainees, watchmen, helpers, and guards working at the site of the work.

b. The payroll records shall contain the name, social security number, and address of each such employee; his or her correct classification; hourly rates of wages paid (including rates of contributions or costs anticipated for bona fide fringe benefits or cash equivalent thereof the types described in Section 1(b)(2)(B) of the Davis Bacon Act); daily and weekly number of hours worked; deductions made; and actual wages paid. In addition, for Appalachian contracts, the payroll records shall contain a notation indicating whether the employee does, or does not, normally reside in the labor area as defined in Attachment A, paragraph 1. Whenever the Secretary of Labor, pursuant to Section IV, paragraph 3b, has found that the wages of any laborer or mechanic include the amount of any costs reasonably anticipated in providing benefits under a plan or program described in Section 1(b)(2)(B) of the Davis Bacon Act, the contractor and each subcontractor shall maintain records which show that the commitment to provide such benefits is enforceable, that the plan or program is financially responsible, that the plan or program has been communicated in writing to the laborers or mechanics affected, and show the cost anticipated or the actual cost incurred in providing benefits. Contractors or subcontractors employing apprentices or trainees under approved programs shall maintain written evidence of the registration of apprentices and trainees, and ratios and wage rates prescribed in the applicable programs.

c. Each contractor and subcontractor shall furnish, each week in which any contract work is performed, to the SHA resident engineer a payroll of wages paid each of its employees (including apprentices, trainees, and helpers, described in Section IV, paragraphs 4 and 5, and watchmen and guards engaged on work during the preceding weekly payroll period). The payroll submitted shall set out accurately and completely all of the information required to be maintained under paragraph 2b of this Section V. This information may be submitted in any form desired. Optional Form WH-347 is available for this purpose and may be purchased from the Superintendent of Documents (Federal stock number 029-005-0014-1), U.S. Government Printing Office, Washington, D.C. 20402. The prime contractor is responsible for the submission of copies of payrolls by all subcontractors.

d. Each payroll submitted shall be accompanied by a "Statement of Compliance," signed by the contractor or subcontractor or his/her agent who pays or supervises the payment of the persons employed under the contract and shall certify the following:

(1) that the payroll for the payroll period contains the information required to be maintained under paragraph 2b of this Section V and that such information is correct and complete;

(2) that such laborer or mechanic (including each helper, apprentice, and trainee) employed on the contract during the payroll period has been paid the full weekly wages earned, without rebate, either directly or indirectly, and that no deductions have been made either directly or indirectly from the full wages earned, other than permissible deductions as set forth in the Regulations, 29 CFR 3;

(3) that each laborer or mechanic has been paid not less that the applicable wage rate and fringe benefits or cash equivalent for the classification of worked performed, as specified in the applicable wage determination incorporated into the contract.

e. The weekly submission of a properly executed certification set forth on the reverse side of Optional Form WH-347 shall satisfy the requirement for submission of the "Statement of Compliance" required by paragraph 2d of this Section V.

f. The falsification of any of the above certifications may subject the contractor to civil or criminal prosecution under 18 U.S.C. 1001 and 31 U.S.C. 231.

g. The contractor or subcontractor shall make the records required under paragraph 2b of this Section V available for inspection, copying, or transcription by authorized representatives of the SHA, the FHWA, or the DOL, and shall permit such representatives to interview employees during working hours on the job. If the contractor or subcontractor fails to submit the required records or to make them available, the SHA, the FHWA, the DOL, or all may, after written notice to the contractor, sponsor, applicant, or owner, take such actions as may be necessary to cause the suspension of any further payment, advance, or guarantee of funds. Furthermore, failure to submit the required records upon request or to make such records available may be grounds for debarment action pursuant to 29 CFR 5.12.

VI. RECORD OF MATERIALS, SUPPLIES, AND LABOR

1. On all Federal-aid contracts on the National Highway System, except those which provide solely for the installation of protective devices at railroad grade crossings, those which are constructed on a force account or direct labor basis, highway beautification contracts, and contracts for which the total final construction cost for roadway and bridge is less than $1,000,000 (23 CFR 635) the contractor shall:

a. Become familiar with the list of specific materials and supplies contained in Form FHWA-47, "Statement of Materials and Labor Used by Contractor of Highway Construction Involving Federal Funds," prior to the commencement of work under this contract.

b. Maintain a record of the total cost of all materials and supplies purchased for and incorporated in the work, and also of the quantities of those specific materials and supplies listed on Form FHWA-47, and in the units shown on Form FHWA-47.

c. Furnish, upon the completion of the contract, to the SHA resident engineer on Form FHWA-47 together with the data required in paragraph 1b relative to materials and supplies, a final labor summary of all contract work indicating the total hours worked and the total amount earned.

2. At the prime contractor's option, either a single report covering all contract work or separate reports for the contractor and for each subcontract shall be submitted.

VII. SUBLETTING OR ASSIGNING THE CONTRACT

1. The contractor shall perform with its own organization contract work amounting to not less than 30 percent (or a greater percentage if specified elsewhere in the contract) of the total original contract price, excluding any specialty items designated by the State. Specialty items may be performed by subcontract and the amount of any such specialty items performed may be deducted from the total original contract price before computing the amount of work required to be performed by the contractor's own organization (23 CFR 635).

a. "Its own organization" shall be construed to include only workers employed and paid directly by the prime contractor and equipment owned or rented by the prime contractor, with or without operators. Such term does not include employees or equipment of a subcontractor, assignee, or agent of the prime contractor.

b. "Specialty Items" shall be construed to be limited to work that requires highly specialized knowledge, abilities, or equipment not ordinarily available in the type of contracting organizations qualified and expected to bid on the contract as a whole and in general are to be limited to minor components of the overall contract.

2. The contract amount upon which the requirements set forth in paragraph 1 of Section VII is computed includes the cost of material and manufactured products which are to be purchased or produced by the contractor under the contract provisions.

3. The contractor shall furnish (a) a competent superintendent or supervisor who is employed by the firm, has full authority to direct performance of the work in accordance with the contract requirements, and is in charge of all construction operations (regardless of who performs the work) and (b) such other of its own organizational resources (supervision, management, and engineering services) as the SHA contracting officer determines is necessary to assure the performance of the contract.

4. No portion of the contract shall be sublet, assigned or otherwise disposed of except with the written consent of the SHA contracting officer, or authorized representative, and such consent when given shall not be construed to relieve the contractor of any responsibility for the fulfillment of the contract. Written consent will be given only after the SHA has assured that each subcontract is evidenced in writing and that it contains all pertinent provisions and requirements of the prime contract.

VIII. SAFETY: ACCIDENT PREVENTION

1. In the performance of this contract the contractor shall comply with all applicable Federal, State, and local laws governing safety, health, and sanitation (23 CFR 635). The contractor shall provide all safeguards, safety devices and protective equipment and take any other needed actions as it determines, or as the SHA contracting officer may determine, to be reasonably necessary to protect the life and health of employees on the job and the safety of the public and to protect property in connection with the performance of the work covered by the contract.

2. It is a condition of this contract, and shall be made a condition of each subcontract, which the contractor enters into pursuant to this contract, that the contractor and any subcontractor shall not permit any employee, in performance of the contract, to work in surroundings or under conditions which are unsanitary, hazardous or dangerous to his/her health or safety, as determined under construction safety and health standards (29 CFR 1926) promulgated by the Secretary of Labor, in accordance with Section 107 of the Contract Work Hours and Safety Standards Act (40 U.S.C. 333).

3. Pursuant to 29 CFR 1926.3, it is a condition of this contract that the Secretary of Labor or authorized representative thereof, shall have right of entry to any site of contract performance to inspect or investigate the matter of compliance with the construction safety and health standards and to carry out the duties of the Secretary under Section 107 of the Contract Work Hours and Safety Standards Act (40 U.S.C. 333).

IX. FALSE STATEMENTS CONCERNING HIGHWAY PROJECTS

In order to assure high quality and durable construction in conformity with approved plans and specifications and a high degree of reliability on statements and representations made by engineers, contractors, suppliers, and workers on Federal-aid highway projects, it is essential that all persons concerned with the project perform their functions as carefully, thoroughly, and honestly as possible. Willful falsification, distortion, or misrepresentation with respect to any facts related to the project is a violation of Federal law. To prevent any misunderstanding regarding the seriousness of these and similar acts, the following notice shall be posted on each Federal-aid highway project (23 CFR 635) in one or more places where it is readily available to all persons concerned with the project:

NOTICE TO ALL PERSONNEL ENGAGED ON FEDERAL-AID HIGHWAY PROJECTS

18 U.S.C. 1020 reads as follows:

"Whoever, being an officer, agent, or employee of the United States, or of any State or Territory, or whoever, whether a person, association, firm, or corporation, knowingly makes any false statement, false representation, or false report as to the character, quality, quantity, or cost of the material used or to be used, or the quantity or quality of the work performed or to be performed, or the cost thereof in connection with the submission of plans, maps, specifications, contracts, or costs of construction on any highway or related project submitted for approval to the Secretary of Transportation; or

Whoever knowingly makes any false statement, false representation, false report or false claim with respect to the character, quality, quantity, or cost of any work performed or to be performed,

or materials furnished or to be furnished, in connection with the construction of any highway or related project approved by the Secretary of Transportation; or

Whoever knowingly makes any false statement or false representation as to material fact in any statement, certificate, or report submitted pursuant to provisions of the Federal-aid Roads Act approved July 1, 1916, (39 Stat. 355), as amended and supplemented;

Shall be fined not more that $10,000 or imprisoned not more than 5 years or both."

X. IMPLEMENTATION OF CLEAN AIR ACT AND FEDERAL WATER POLLUTION CONTROL ACT

(Applicable to all Federal-aid construction contracts and to all related subcontracts of $100,000 or more.)

By submission of this bid or the execution of this contract, or subcontract, as appropriate, the bidder, Federal-aid construction contractor, or subcontractor, as appropriate, will be deemed to have stipulated as follows:

1. That any facility that is or will be utilized in the performance of this contract, unless such contract is exempt under the Clean Air Act, as amended (42 U.S.C. 1857 et seq., as amended by Pub.L. 91-604), and under the Federal Water Pollution Control Act, as amended (33 U.S.C. 1251 et seq., as amended by Pub.L. 92-500), Executive Order 11738, and regulations in implementation thereof (40 CFR 15) is not listed, on the date of contract award, on the U.S. Environmental Protection Agency (EPA) List of Violating Facilities pursuant to 40 CFR 15.20.

2. That the firm agrees to comply and remain in compliance with all the requirements of Section 114 of the Clean Air Act and Section 308 of the Federal Water Pollution Control Act and all regulations and guidelines listed thereunder.

3. That the firm shall promptly notify the SHA of the receipt of any communication from the Director, Office of Federal Activities, EPA, indicating that a facility that is or will be utilized for the contract is under consideration to be listed on the EPA List of Violating Facilities.

4. That the firm agrees to include or cause to be included the requirements of paragraph 1 through 4 of this Section X in every nonexempt subcontract, and further agrees to take such action as the government may direct as a means of enforcing such requirements.

XI. CERTIFICATION REGARDING DEBARMENT, SUSPENSION, INELIGIBILITY AND VOLUNTARY EXCLUSION

1. **Instructions for Certification - Primary Covered Transactions:**
(Applicable to all Federal-aid contracts - 49 CFR 29)

a. By signing and submitting this proposal, the prospective primary participant is providing the certification set out below.

b. The inability of a person to provide the certification set out below will not necessarily result in denial of participation in this covered transaction. The prospective participant shall submit an explanation of why it cannot provide the certification set out below. The certification or explanation will be considered in connection with the department or agency's determination whether to enter into this transaction. However, failure of the prospective primary participant to furnish a certification or an explanation shall disqualify such a person from participation in this transaction.

c. The certification in this clause is a material representation of fact upon which reliance was placed when the department or agency determined to enter into this transaction. If it is later determined that the prospective primary participant knowingly rendered an erroneous certification, in addition to other remedies available to the Federal Government, the department or agency may terminate this transaction for cause of default.

d. The prospective primary participant shall provide immediate written notice to the department or agency to whom this proposal is submitted if any time the prospective primary participant learns that its certification was erroneous when submitted or has become erroneous by reason of changed circumstances.

e. The terms "covered transaction," "debarred," "suspended," "ineligible," "lower tier covered transaction," "participant," "person," "primary covered transaction," "principal," "proposal," and "voluntarily excluded," as used in this clause, have the meanings set out in the Definitions and Coverage sections of rules implementing Executive Order 12549. You may contact the department or agency to which this proposal is submitted for assistance in obtaining a copy of those regulations.

f. The prospective primary participant agrees by submitting this proposal that, should the proposed covered transaction be entered into, it shall not knowingly enter into any lower tier covered transaction with a person who is debarred, suspended, declared ineligible, or voluntarily excluded from participation in this covered transaction, unless authorized by the department or agency entering into this transaction.

g. The prospective primary participant further agrees by submitting this proposal that it will include the clause titled "Certification Regarding Debarment, Suspension, Ineligibility and Voluntary Exclusion-Lower Tier Covered Transaction," provided by the department or agency entering into this covered transaction, without modification, in all lower tier covered transactions and in all solicitations for lower tier covered transactions.

h. A participant in a covered transaction may rely upon a certification of a prospective participant in a lower tier covered transaction that is not debarred, suspended, ineligible, or voluntarily excluded from the covered transaction, unless it knows that the certification is erroneous. A participant may decide the method and frequency by which it determines the eligibility of its principals. Each participant may, but is not required to, check the nonprocurement portion of the "Lists of Parties Excluded From Federal Procurement or Nonprocurement Programs" (Nonprocurement List) which is compiled by the General Services Administration.

i. Nothing contained in the foregoing shall be construed to require establishment of a system of records in order to render in good faith the certification required by this clause. The knowledge and information of participant is not required to exceed that which is normally possessed by a prudent person in the ordinary course of business dealings.

j. Except for transactions authorized under paragraph f of these instructions, if a participant in a covered transaction knowingly enters into a lower tier covered transaction with a person who is suspended, debarred, ineligible, or voluntarily excluded from participation in this transaction, in addition to other remedies available to the Federal Government, the department or agency may terminate this transaction for cause or default.

* * * * *

Certification Regarding Debarment, Suspension, Ineligibility and Voluntary Exclusion--Primary Covered Transactions

1. The prospective primary participant certifies to the best of its knowledge and belief, that it and its principals:

a. Are not presently debarred, suspended, proposed for debarment, declared ineligible, or voluntarily excluded from covered transactions by any Federal department or agency;

b. Have not within a 3-year period preceding this proposal been convicted of or had a civil judgement rendered against them for commission of fraud or a criminal offense in connection with obtaining, attempting to obtain, or performing a public (Federal, State or local) transaction or contract under a public transaction; violation of Federal or State antitrust statutes or commission of embezzlement, theft, forgery, bribery, falsification or destruction of records, making false statements, or receiving stolen property;

c. Are not presently indicted for or otherwise criminally or civilly charged by a governmental entity (Federal, State or local) with commission of any of the offenses enumerated in paragraph 1b of this certification; and

d. Have not within a 3-year period preceding this application/proposal had one or more public transactions (Federal, State or local) terminated for cause or default.

2. Where the prospective primary participant is unable to certify to any of the statements in this certification, such prospective participant shall attach an explanation to this proposal.

* * * * *

2. **Instructions for Certification - Lower Tier Covered Transactions:**

(Applicable to all subcontracts, purchase orders and other lower tier transactions of $25,000 or more - 49 CFR 29)

a. By signing and submitting this proposal, the prospective lower tier is providing the certification set out below.

b. The certification in this clause is a material representation of fact upon which reliance was placed when this transaction was entered into. If it is later determined that the prospective lower tier participant knowingly rendered an erroneous certification, in addition to other remedies available to the Federal Government, the department, or agency with which this transaction originated may pursue available remedies, including suspension and/or debarment.

c. The prospective lower tier participant shall provide immediate written notice to the person to which this proposal is submitted if at any time the prospective lower tier participant learns that its certification was erroneous by reason of changed circumstances.

d. The terms "covered transaction," "debarred," "suspended," "ineligible," "primary covered transaction," "participant," "person," "principal," "proposal," and "voluntarily excluded," as used in this clause, have the meanings set out in the Definitions and Coverage sections of rules implementing Executive Order 12549. You may contact the person to which this proposal is submitted for assistance in obtaining a copy of those regulations.

e. The prospective lower tier participant agrees by submitting this proposal that, should the proposed covered transaction be entered into, it shall not knowingly enter into any lower tier covered transaction with a person who is debarred, suspended, declared ineligible, or voluntarily excluded from participation in this covered transaction, unless authorized by the department or agency with which this transaction originated.

f. The prospective lower tier participant further agrees by submitting this proposal that it will include this clause titled "Certification Regarding Debarment, Suspension, Ineligibility and Voluntary Exclusion-Lower Tier Covered Transaction," without modification, in all lower tier covered transactions and in all solicitations for lower tier covered transactions.

g. A participant in a covered transaction may rely upon a certification of a prospective participant in a lower tier covered transaction that is not debarred, suspended, ineligible, or voluntarily excluded from the covered transaction, unless it knows that the certification is erroneous. A participant may decide the method and frequency by which it determines the eligibility of its principals. Each participant may, but is not required to, check the Nonprocurement List.

h. Nothing contained in the foregoing shall be construed to require establishment of a system of records in order to render in good faith the certification required by this clause. The knowledge and information of participant is not required to exceed that which is normally possessed by a prudent person in the ordinary course of business dealings.

i. Except for transactions authorized under paragraph e of these instructions, if a participant in a covered transaction knowingly enters into a lower tier covered transaction with a person who is suspended, debarred, ineligible, or voluntarily excluded from participation in this transaction, in addition to other remedies available to the Federal Government, the department or agency with which this transaction originated may pursue available remedies, including suspension and/or debarment.

* * * * *

Certification Regarding Debarment, Suspension, Ineligibility and Voluntary Exclusion--Lower Tier Covered Transactions:

1. The prospective lower tier participant certifies, by submission of this proposal, that neither it nor its principals is presently debarred, suspended, proposed for debarment, declared ineligible, or voluntarily excluded from participation in this transaction by any Federal department or agency.

2. Where the prospective lower tier participant is unable to certify to any of the statements in this certification, such prospective participant shall attach an explanation to this proposal.

* * * * *

XII. CERTIFICATION REGARDING USE OF CONTRACT FUNDS FOR LOBBYING

(Applicable to all Federal-aid construction contracts and to all related subcontracts which exceed $100,000 - 49 CFR 20)

1. The prospective participant certifies, by signing and submitting this bid or proposal, to the best of his or her knowledge and belief, that:

a. No Federal appropriated funds have been paid or will be paid, by or on behalf of the undersigned, to any person for influencing or attempting to influence an officer or employee of any Federal agency, a Member of Congress, an officer or employee of Congress, or an employee of a Member of Congress in connection with the awarding of any Federal contract, the making of any Federal grant, the making of any Federal loan, the entering into of any cooperative agreement, and the extension, continuation, renewal, amendment, or modification of any Federal contract, grant, loan, or cooperative agreement.

b. If any funds other than Federal appropriated funds have been paid or will be paid to any person for influencing or attempting to influence an officer or employee of any Federal agency, a Member of Congress, an officer or employee of Congress, or an employee of a Member of Congress in connection with this Federal contract, grant, loan, or cooperative agreement, the undersigned shall complete and submit Standard Form-LLL, "Disclosure Form to Report Lobbying," in accordance with its instructions.

2. This certification is a material representation of fact upon which reliance was placed when this transaction was made or entered into. Submission of this certification is a prerequisite for making or entering into this transaction imposed by 31 U.S.C. 1352. Any person who fails to file the required certification shall be subject to a civil penalty of not less than $10,000 and not more than $100,000 for each such failure.

3. The prospective participant also agrees by submitting his or her bid or proposal that he or she shall require that the language of this certification be included in all lower tier subcontracts, which exceed $100,000 and that all such recipients shall certify and disclose accordingly.

AFFIRMATIVE ACTION REQUIREMENTS
UTILIZATION OF DISADVANTAGED BUSINESS ENTERPRISES
FOR FEDERAL-AID CONTRACTS

CONTRACT GOALS

FOR THE PURPOSE OF THIS CONTRACT, A GOAL OF **ZERO (0)** PERCENT HAS BEEN ESTABLISHED FOR SOCIALLY AND ECONOMICALLY DISADVANTAGED BUSINESSES THAT ARE OWNED AND CONTROLLED BY THOSE INDIVIDUALS WHO ARE BLACK AMERICANS, HISPANIC AMERICANS, ASIAN-PACIFIC AMERICANS, SUBCONTINENT ASIAN AMERICANS, NATIVE AMERICANS, OR WOMEN PURSUANT TO THE MARYLAND DEPARTMENT OF TRANSPORTATION (MDOT) MINORITY BUSINESS ENTERPRISE PROGRAM:

It is the policy of the Maryland Department of Transportation that disadvantaged business enterprises as defined in 49 CFR Part 26 and the Safe, Accountable, Flexible, Efficient Transportation Equity Act: A Legacy for Users (SAFETEA-LU) shall have an equal opportunity to participate in the performance of the contracts financed in whole or in part with Federal funds under these agreements. Consequently, the disadvantaged business enterprise requirements of 49 CFR Part 26 and SAFETEA-LU apply to this agreement.

The bidder agrees to ensure that disadvantaged business enterprises as defined in 49 CFR Part 26 and SAFETEA-LU have an equal opportunity to participate in the performance of contracts and subcontracts financed in whole or in part with Federal funds provided under this agreement. In this regard, all bidders shall take all necessary and reasonable steps in accordance with 49 CFR Part 26 and SAFETEA-LU to ensure that disadvantaged business enterprises have an equal opportunity to compete for and perform on Federally funded contracts. The Maryland Department of Transportation and their bidders shall not discriminate on the basis of race, color, national origin, or sex in the award and performance of this Contract.

A. GENERAL

For the purpose of these requirements, the following terms as defined below shall apply:

Administration Representative – A DBE/MBE Officer or employee of an Administration who enforces the laws and regulations pertaining to disadvantaged and minority business enterprise and contract compliance.

Affirmative Actions – Specific steps taken to eliminate discrimination and its effects, to ensure nondiscriminatory results and practices in the future, and to involve disadvantaged and minority business enterprises fully in contracts and programs.

Business Enterprises – Any legal entity which is organized in any form other than as a joint venture (e.g., sole proprietorship, partnership, corporation, etc.) to engage in lawful commercial transactions.

Certified Business – A business which by order of the Chair/MBE Advisory Council or his/hers designee, has been certified as a bona fide DBE/MBE. MDOT certification does not equate to a pre-qualification status.

DBE – Disadvantaged Business Enterprise – Reference 49 CFR, Part 26, Subpart A) a small business concern: (1) which is at least 51 percent owned by one or more socially and economically disadvantaged individuals. Where stock ownership is involved, the disadvantaged owner(s) shall own at least 51 percent of each class of voting stock and at least 51 percent of the aggregate of all classes of stock that have been issued (also applies to publicly owned businesses); and (2) whose management and daily business operations are controlled by one or more of the socially and economically disadvantaged individuals who have ownership. In this specification the terms MBE and DBE have the same meaning.

DBE/MBE Directory – A compilation of businesses certified by MDOT as disadvantaged, minority, or socially and economically disadvantaged businesses. The directory will be published annually with quarterly supplements. It will also be provided in automated format and on the Internet to be updated as changes are made.

DBE/MBE Participation Packet – The documents submitted by the bidder or proposer pursuant to the appropriate special bid provisions. The DBE/MBE Participation Packet consists of the Certified DBE Utilization and Fair Solicitation Affidavit and the DBE Participation Schedule, both of which must be submitted with your bid or initial price proposal. The DBE Participation Packet also includes the following documents, which shall be submitted after bids or proposals are opened: Outreach Efforts Compliance Statement (MDOT-OP-018-2), DBE Subcontractor Project Participation Affidavit (MDOT-OP-019-2), MDOT Joint Venture Disclosure Affidavit (D-EEO-006), and Minority Contractor Unavailability Certificate (OOC46).

DBE/MBE Program – A program developed by MDOT to implement the requirements of Title 14, Subtitle 3 of the State Finance and Procurement Article, Annotated Code of Maryland; Title 10, Subtitle 3 of the State Finance and Procurement Article of the Annotated Code of Maryland for Leases of State-Owned Property; and 49 CFR, Part 26, Subparts A and C for all Federal Department of Transportation Financial Assistance Programs.

Director, Office of Equal Opportunity – The individual designated for the Administration's overall MBE compliance.

Joint Venture – An association of a DBE/MBE firm and one or more other firms to carry out a single, for-profit business enterprise, for which the parties combine their property, capital, efforts, skills, and knowledge, and in which the DBE/MBE is responsible for a distinct, clearly defined portion of the work of the contract and whose share in the capital contribution, control, management, risks, and profits of the joint venture are commensurate with its ownership interest.

Small Business Administration (SBA) 8(a) Certification – The SBA 8(a) Certification Program is a Federal Program which establishes firms as disadvantaged and eligible for participation in the Federal SBA Program.

Socially and Economically Disadvantaged Individual Pursuant to 49 CFR, Part 26 – Those individuals who are citizens of the United States (or lawfully admitted permanent residents). For convenience, these individuals and groups are referred to as "minorities" in this document and who are:

1. Found by the MDOT to be socially and economically disadvantaged on a case-by-case basis;

2. Any individual in the following groups, members of which are rebuttably presumed to be socially and economically disadvantaged.

a. "Black Americans," which includes persons having origins in any of the Black racial groups of Africa;

b. "Hispanic Americans," which includes persons of Mexican, Puerto Rican, Cuban, Dominican, Central or South American, or other Spanish or Portuguese culture or origin, regardless of race;

c. "Native Americans," which includes persons who are American Indian, Eskimos, Aleuts, or Native Hawaiians;

d. "Asian-Pacific Americans," which included persons whose origins are from Japan, China, Taiwan, Korea, Burma (Myanmar), Vietnam, Laos, Cambodia (Kampuchea), Thailand, Malaysia, Indonesia, the Philippines, Brunei, Samoa, Guam, the U.S. Trust Territories of the Pacific Islands (Republic of Palau), the Commonwealth of the Northern Marianas Islands, Macao, Fiji, Tonga, Kirbati, Juvalu, Nauru, Federated States of Micronesia, or Hong Kong;

e. "Subcontinent Asian American," which includes persons whose origins are from India, Pakistan, Bangladesh, Bhutan, the Maldives Islands, Nepal or Sri Lanka;

f. Women;

3. Only those persons whose personal net worth does not exceed $750,000 may be found to be economically disadvantaged.

B. DBE/MBE and Good Faith Effort Requirements

1. This contract includes a DBE participation goal for subcontracting and/or procurement of materials and/or services. Bidders (or offerors) must make a good faith effort to meet the DBE participation goal **before bids or proposals are due**, including outreach efforts. A bid or initial proposal must include both a completed and executed Certified DBE Utilization and Fair Solicitation Affidavit and DBE Participation Schedule. The failure of a bidder to complete and submit these documents shall result in a determination that the bid is not responsive. The failure of an offeror to complete and submit these documents shall result in a determination that the proposal is not susceptible of being selected for award.

2. In making a good faith effort to achieve the DBE goal, prior to completing the Certified DBE Utilization and Fair Solicitation Affidavit and the DBE Participation Schedule and prior to submitting a bid or initial proposal the bidders (or offerors) including those bidders or offerors that are certified DBEs must:

a. Identify specific work categories within the scope of the procurement appropriate for subcontracting and/or procurement of materials and/or services;

b. Solicit DBEs in writing at least 10 days before bids or initial proposals are due, describing the identified work categories and providing instructions on how to bid on the subcontracts and/or procurement of materials and/or services;

c. Attempt to make personal contact with the DBEs solicited and to document these attempts;

d. Assist DBEs to fulfill, or to seek waiver of, bonding requirements; and

e. Attend prebid or other meetings the procurement agency schedules to publicize contracting opportunities to DBEs.

3. All firms bidding on a Federal-Aid Contract shall submit the name and address of all subcontractors, service providers and suppliers that submitted quotes on the Contract. All subcontractors, service providers and suppliers shall complete and submit the form entitled Contractor Information, to the Administration.

4. The bidder shall seek commitments from disadvantaged business enterprises by subcontracting and/or procurement of materials and/or services, the combined value of which equals or exceeds the appropriate percent (goal) of the total value of the prime contract. A bidder may count toward its DBE goals expenditures for materials and supplies obtained from DBE regular dealers and/or manufacturers provided that the DBEs assume the actual and contractual responsibility for the provision of the materials and supplies. The bidder may count its entire expenditure to a DBE manufacturer (i.e., a supplier that produces goods from raw materials or substantially alters them before resale). The bidder may count sixty (60) percent of its expenditures to a DBE regular dealer that is not a manufacturer, provided that the DBE supplier performs a commercially useful function in the supply process. The apparent low bidder shall submit to the Administration, within ten (10) business days after notification that it is the apparent low bidder, an acceptable Affirmative Action Plan for the utilization of Disadvantaged Business Enterprises in this Contract. The Contract will not be awarded without the Bidder's AAP being approved by the Administration.

The Affirmative Action Plan shall include as a minimum:

a. The name of an employee designated as the bidder's liaison officer for minority affairs.

b. A complete DBE Subcontractor Project Participation Affidavit (MDOT-OP-019-2), using contractors whose names appear in the DBE/MBE directory or who are otherwise certified by MDOT as being a disadvantaged business enterprise. Except as permitted by law and approved by the Administration, this affidavit shall include all DBE firms identified on the DBE Participation Schedule with a percentage of participation that meets or exceeds the percentage of participation indicated in the bid or initial proposal.

c. A completed Outreach Efforts Compliance Statement (MDOT-OP 018-2).

5. When a bidder intends to attain the appropriate goal for disadvantaged business enterprise participation by use of a joint venture, the bidder shall submit a Joint Venture Disclosure Affidavit (Form D-EEO-006-A) showing the extent of disadvantaged business participation. If a bidder intends to use a joint venture as a subcontractor to meet its goal, the affidavit shall be submitted through the bidder by the proposed subcontractor and be signed by all parties. A DBE, even in a joint venture arrangement shall be certified as a DBE by MDOT prior to being included in the Affirmative Action Plan.

6. Where the proposed DBE participation does not meet the DBE contract goals, sufficient evidence to demonstrate that the bidder has taken all necessary and reasonable steps to make a good faith effort to meet these goals shall be required.

7. Determination of Bid Responsiveness for Federal-Aid Contracts

If the bidder is unable to secure from DBEs by subcontracting and/or by procurement of materials and/or services, commitments which at least equal the appropriate percent (goal) of the values of the prime Contract at the time of bid, he shall request, in writing, a waiver of the unmet portion of the goal. This request must be initiated by checking the appropriate box on the Certified DBE Utilization and Fair Solicitation Affidavit submitted with the bid or initial proposal.

The waiver may be granted by the Administrator. To obtain approval of a waiver, the bidder shall submit the following information:

a. A detailed statement of efforts made prior to bid to contact and negotiate with DBEs including: (i) the dates, names, addresses, and telephone numbers of DBEs who were contacted; (ii) a description of the information provided to DBEs requesting the plans, specifications, and anticipated time schedule for portions of the work to be performed and (iii) a detailed statement of the reasons why additional prospective agreements with DBEs were not reached;

b. A detailed statement of the efforts made to select portions of the work proposed to be performed by DBEs in order to increase the likelihood of achieving the stated goals;

c. For each DBE that the Contractor considers not qualified, but from which a bid has been received, a detailed statement of the reasons for the bidder's conclusion; and

d. For each DBE contacted but unavailable, (i) a Minority Contractor Unavailability Certificate (Form OOC46) signed by the disadvantaged business enterprise, or (ii) a statement from the bidder shall be submitted that states that the DBE refused to sign the Certificate.

8. Guidance concerning good faith efforts. The following is a list of the types of actions and factors that will be used to determine the bidder's or offeror's good faith efforts to obtain DBE participation. It is not intended to be a mandatory checklist, nor is it intended to be exclusive or exhaustive. Other factors or types of efforts may be relevant in appropriate cases.

(1) Soliciting through all reasonable and available means (e.g. attendance at pre-bid meetings, advertising and/or written notices) the interest of certified DBEs who have the capability to perform the work of the contract. The bidder must solicit this interest within sufficient time to allow the DBEs to respond to the solicitation. The bidder must determine with certainty if the DBEs are interested by taking appropriate steps to follow up initial solicitations.

(2) Selecting portions of the work to be performed by DBEs in order to increase the likelihood that the DBE goals will be achieved. This includes, where appropriate, breaking out contract work items into economically feasible units to facilitate DBE participation, even when the bidder or offeror might otherwise prefer to perform these work items with its own forces.

(3) Providing interested DBEs with adequate information about the plans, specifications, and requirements of the contract in a timely manner to assist them in responding to a solicitation.

(4) **(a)** Negotiating in good faith with interested DBEs. It is the bidder's or offeror's responsibility to make a portion of the work available to DBE subcontractors and suppliers and to select those portions of the work or material needs consistent with the available DBE subcontractors and suppliers, so as to facilitate DBE participation.

(b) A bidder using good business judgment would consider a number of factors in negotiating with subcontractors, including DBE subcontractors, and would take a firm's price and capabilities as well as contract goals into consideration. However, the fact that there may be some additional costs involved in finding and using DBEs is not in itself sufficient reason for a bidder's failure to meet the contract DBE goal, as long as such costs are reasonable. Also, the ability or desire of a prime contractor to perform the work of a contract with its own organization does not relieve the bidder of the responsibility to make good faith efforts. Bidders and offerors are not, however, required to accept higher quotes from DBEs if the price difference is excessive or unreasonable.

(5) Not rejecting DBEs as being unqualified without sound reasons based on a thorough investigation of their capabilities. The contractor's standing within its industry, membership in specific groups, organizations, or associations and political or social affiliations (for example union vs. non-union employee status) are not legitimate causes for the rejection or non-solicitation of bids in the contractor's efforts to meet the project goal.

(6) Making efforts to assist interested DBEs in obtaining bonding, lines of credit, or insurance as required by the recipient or contractor.

(7) Making efforts to assist interested DBEs in obtaining necessary equipment, supplies, materials, or related assistance or services.

(8) Effectively using the services of available minority/women community organizations; minority/women contractors' groups; local, state, and Federal minority/women business assistance offices; and other organizations as allowed on a case-by-case basis to provide assistance in the recruitment and placement of DBEs.

(9) In determining whether a bidder or offeror has made good faith efforts, you may take into account the performance of other bidders or offerors in meeting the contract goal. For example, when the apparent successful bidder or offeror fails to meet the contract goal, but others meet it, the Administration may reasonably raise the question of whether, with additional reasonable efforts, the apparent successful bidder or offeror could have met the goal. If the apparent successful bidder or offeror fails to meet the goal, but meets or exceeds the average DBE participation obtained by other bidders or offerors, the Administration may view this, in conjunction with other factors, as evidence of the apparent successful bidder or offeror having made good faith efforts.

9. Bidder Use of MBE Special Services

The bidder shall consider, whenever possible, utilizing the services of minority-owned banks. Most minority banks are full-service corporations that can provide an array of financial services such as Treasury and Tax Loan fund accounts, time and demand deposit accounts, payroll services, and if needed, organization investment counseling.

10. Bidder Records

The bidder shall maintain records showing actions which have been taken to comply with procedures set forth herein.

11. Bidder Cooperation

The bidder shall cooperate with the Administration Representative in any reviews of the Contractor's procedures and practices with respect to DBEs which the Administration Representative may from time to time conduct.

12. Bidder MBE Modifications

During the life of the Contract, all plans to modify the approved DBE participation program will require the approval of the Administrator or his authorized representative. This shall include any changes to the items of work to be sublet or materials and services to be obtained which differ for those in the original DBE participation program. Any such request for revisions shall be directed to the appropriate District Engineer for their disposition.

C. RECORDS AND REPORTS

1. The Contractor shall keep such records as are necessary to determine compliance with its Minority Business Enterprise utilization obligations. The records kept by the Contractor shall be designed to indicate:

a. The name of disadvantaged and non-disadvantaged subcontractors and suppliers, the type of work materials or services being performed on or incorporated in this project, and the monetary value of such work materials or services.

b. Documentation of all correspondence, contacts, telephone calls, etc., to obtain the services of disadvantaged business enterprises on this project.

c. The progress and efforts made in seeking out disadvantaged contractor organizations and individual disadvantaged contractors for work on this project.

2. Information required to be submitted for Federally Assisted contracts in accordance with 49 CFR Part 26:

a. All bidders (not only the apparent successful bidder) shall provide the following information:

(1) The age of the bidding firm; and

(2) The annual gross receipts of the bidding firm.

b. All bidders (not only the apparent successful bidder) shall provide the following information for each firm quoting or considered as subcontractors:

(1) The name of firm; and

(2) The address of firm.

c. The Administration will contact each of the firms quoting or considered as subcontractors to obtain:

(1) The age of the firm; and

(2) The annual gross receipts of the firm

If this information already has been gathered by the Administration on a firm and it is current, it will not be requested.

3. The Contractor shall submit reports on a quarterly basis of those contracts and other business transactions executed with disadvantaged business enterprises with respect to the records referred to in Subparagraph 1.a above, in such form, manner, and content as prescribed by the Administration. The quarterly reports shall be due on the 15th calendar day of January, April, July, and October. If the Contractor cannot submit their report on time, they shall notify the Administration's Representative and request additional time to submit the report. Failure of the Contractor to report in a timely manner may result in a finding of noncompliance. Additional reports may be required by the Administration upon written request.

4. To ensure compliance with the certified DBE contract participation goals, the Contractor shall:

a. Submit monthly, a report listing unpaid invoices, over 30 days, from all certified DBE subcontractors and the reason payment has not been made;

b. Include in its agreement with certified DBE subcontractors a requirement that the DBE subcontractors are to submit monthly to the Administration, a report identifying the prime Contractor and listing the following:

1. Payment received from the Contractor in the preceding 30 days; and

2. Invoices for which the subcontractor has not been paid.

5. All such records shall be retained for a period of three years following acceptance of final payment and shall be available for inspection by the U.S. Department of Transportation, the Maryland Department of Transportation, and the Administration.

D. ADMINISTRATIVE PROCEDURES FOR ENFORCEMENT

1. Whenever the Administration believes the prime Contractor or any subcontractor may not be operating in compliance with the terms of these provisions, the Administration Representative will conduct an investigation. If the Administration Representative finds the prime Contractor or any subcontractor not in compliance with these provisions, he will make a report of non-compliance and notify such Contractor in writing of the steps that will, in the judgment of the Administration, bring the Contractor into compliance. If the Contractor fails or refuses to comply fully with such steps, the Administration Representative will make a final report of noncompliance to the Administrator, who may direct the imposition of one or more of the sanctions listed below:

a. Suspension of work on a project, pending correction;

b. Withholding payment or a percentage thereof, pending correction;

c. Referral of DBE/MBE to MDOT Office of MBE for review for decertification or minority business fraud investigation;

d. Referral to MDOT Office of MBE for review/referral to the Attorney General's Office for review for initiation of debarment;

e. Referral to the Attorney General's Office for review for debarment or for criminal prosecution through the MDOT Office of General Counsel; or

f. Any other action as appropriate.

The Administrator will determine which sanction(s) should be imposed in order to promote the purpose of the MDOT DBE/MBE Program.

2. If the documents used to determine the status of a DBE contain false, misleading, or misrepresenting information, the matter may be referred to the MDOT Office of MBE for appropriate action.

3. Loss of DBE Certification

a. When a prime Contractor has made a commitment to use a DBE who has lost its certification but the subcontract has not been executed prior to the notice of loss of certification, the prime Contractor is required to obtain an eligible, certified DBE for the contract or demonstrate to MDOT that it has made a good faith effort to do so.

b. When a prime Contractor has executed a contract with a DBE subcontractor before the notice of loss of certification, the prime Contractor may continue to use the firm on the contract and may continue to receive credit towards its DBE goal, i.e., contract goal, for the work of that subcontractor.

c. The work carried out by a DBE Prime Contractor would be counted by MDOT up to the loss of certification. The work performed after the loss of certification would not be considered DBE participation.

d. When a DBE subcontractor has lost its certification, MDOT may not continue to count the DBE participation which takes place after the loss of certification as DBE work when counting participation towards the overall goal of the modal administration or the Department.

e. If a DBEs loss of certification is the result of exceeding the size standards while performing on a contract, the DBE participation may be counted for both the contract goal and the overall goal.

MBE/DBE COMPLIANCE FIELD MEETING

A MBE/DBE compliance Field Meeting will be conducted to review the responsibilities of the Administration and the Contractor's personnel relative to MBE/DBE Compliance and documentation. The meeting will be held within two weeks after starting work on the project.

The Construction Project Engineer, who will notify the following of the date, time and location, will arrange the meeting. At least one week advanced notice will be required.

(a) Administrative Representatives.

(1) Director, Office of Equal Opportunity or Designee

(2) District Equal Opportunity Officer

(3) Regional Constructional Engineer

(4) Construction Project Engineer

(5) Construction Inspection Division Inspector

(b) Contract Representatives.

(1) Superintendent - Prime Contractor

(2) Equal Opportunity Officer - Prime Contractor

(3) Owner/Superintendent/Foreman MBE/ DBE - Subcontractor

The Construction Project Engineer and Equal Opportunity Representative will jointly conduct the meeting. The Contractor shall notify the appropriate subcontractors and ensure their attendance.

TRAFFIC CONTROL PLAN CERTIFICATION

PRIOR TO THE COMMENCEMENT OF WORK ON THIS PROJECT, THE SUCCESSFUL BIDDER WILL BE REQUIRED TO COMPLETE A TRAFFIC CONTROL PLAN CERTIFICATION, CONTAINING THE INFORMATION SHOWN BELOW. THE CERTIFICATION FORM WILL BE PROVIDED TO THE SUCCESSFUL BIDDER UPON AWARD OF THE CONTRACT.

The Administration's Traffic Control Plan (TCP) has been reviewed and the following course of action shall be followed:

Option 1_____
The TCP is accepted and shall be used on this project.

Option 2_____
The TCP is accepted; however, revisions and/or additions shall be submitted for approval in conformance with the Administration's Specifications 104.01.

Option 3_____
The TCP is not accepted and revision shall be submitted for approval in accordance with the Administration's Specifications 104.01.

It is understood that the effective implementation of the approved TCP is the responsibility of the Contractor. Minor modifications may be made by the Traffic Manager if field conditions warrant and prior concurrence is obtained from the Engineer. Significant changes to the TCP will be submitted to the Engineer in writing, for approval, in conformance with the Administration's Specifications 104.01.

_____ (DATE)

_____ (SIGNATURE)

_____ (PRINT SIGNATURE)

_____ (TITLE)

PREVAILING WAGE
INSTRUCTIONS FOR THE CONTRACTOR

PAYROLLS.

Non-Federally Funded Contracts. For Non-Federally funded projects, which include prevailing wage rates**,** the prime Contractor and each subcontractor shall submit two copies of their payroll records. One copy shall be submitted to the Project Engineer and one shall be sent to the Maryland State Commissioner of Labor & Industry, Room 607, 1100 N. Eutaw Street, Baltimore, MD 21201, where they will be available for inspection during business hours. All wages shall be paid in conformance with the State Finance and Procurement Article, Section 17-201-17-226 of the Annotated Code of Maryland and the Fair Labor Standards Amendments of 1974 (P.L. 93259). If the award amount of a Non-Federally funded job is less than $500,000, the project will be exempt from prevailing wage requirements.

A review has been made of the wage conditions in the locality and, based on the information available, the wage rates and fringe payments listed are determined by the Commissioner of the Department of Labor and Industry to be prevailing for the Contract for the described classes of labor in conformance with the law. It shall be the responsibility of the Contractor to fully comply with the law and to contact the Office of the Commissioner of Labor and Industry for interpretation of the provisions of the law.

Federally Funded Contracts. For Federally funded projects, the prime Contractor and each subcontractor shall submit one copy of the certified payroll to the Project Engineer.

General Requirements for Federally and Non-Federally Funded Contracts. All payrolls are subject to the following requirements:

(a) All payrolls shall be numbered, beginning at No. 1, and consecutively numbered through the end of the Contract.

(b) Contract and FAP numbers shall be shown on all payrolls (as applicable).

(c) All payrolls shall include the employees' full name, classification, social security number, and home address.

(d) All payrolls shall show the employee's basic hourly wage rate, overtime rate (if applicable), and the number of hours worked (tabulated both daily and weekly).

(e) When fringe benefits are required, indicate separately the amount of employer contributions to fringe benefit funds and/or programs. The fringe benefits shall be individually identified, but may be tabulated on a separate sheet. When required fringe benefits are paid in cash, add the required fringe benefit amount to the basic hourly rate to obtain the total prevailing wage rate for the employee.

(f) The employee's net pay and the itemized deductions shall be included in all payrolls.

(g) A Contractor may make deductions that are required by law or required by a collective bargaining agreement (between the Contractor and a bona fide labor organization). Deductions are also permitted if they are identified in a written agreement between the employee and employer that was made at the beginning of employment, provided that the Contractor presents the agreement to the Administration before the employee begins working on the Contract. Each payroll shall also include the U.S. Department of Labor and Hour Public Contracts Division Statement of Compliance Form WH-347 (or its equivalent), signed by an appropriate official of the Contractor/subcontractor. The Contractor's name, address, and telephone number shall also to be shown.

(h) On Non-Federally funded projects, all apprentices shall be registered with the Maryland Apprenticeship and Training Council.

(i) Contractors employing a classification of worker for which a wage rate was not included on the original wage decision, shall submit to the Wage and Hour Team, a request for an additional classification and rate prior to the employee's employment at the project.

(j) Payrolls for Non-Federally Funded projects shall be submitted within 14 calendar days after the end of each payroll period.

(k) Payrolls for Federally Funded projects shall be submitted within 7 calendar days after the end of each payroll period.

OVERTIME.

Non-Federally Funded Contracts. Overtime rates shall be paid by the prime Contractors and subcontractors under their Contracts and agreements with their employees, which in no event shall be less than time and a half the prevailing hourly rate of wages for all hours worked in excess of ten hours in any one calendar day or forty hours in any one calendar week and work performed on Sundays and legal holidays. Fringe benefits shall be paid for all hours worked, including the overtime hours. However, the fringe benefit amounts may be excluded from the half time premium due as overtime compensation.

Federally Funded Contracts. Overtime rates shall be paid as specified in Form FHWA 1273. Fringe benefits shall be paid for all hours worked, including the overtime hours. However, the fringe benefit amounts may be excluded from the half time premium due as overtime compensation.

PENALTIES.

Non-Federally Funded Contracts. When the Contractor is delinquent in submitting payroll records, processing of partial payment estimates will be held in abeyance, pending receipt of the records. The Contractor shall be liable to the Administration for liquidated damages in the amount of $10.00 for each calendar day the records are late.

The Contractor shall be liable to the Administration for liquidated damages in the amount of $20.00 for each day that an employee is paid less than the prevailing wage.

Federally Funded Contracts. When the Contractor is delinquent in submitting payroll records, processing of partial payment estimates will be held in abeyance pending receipt of the records.

INQUIRIES.

Requests for information or questions shall be addressed to:

Maryland State Highway Administration
Office of Highway Development
Wage and Hour Team
707 N. Calvert Streets, MS C-102
Baltimore MD 21203-0717
Fax: 410-209-5001

WAIS Document Retrieval
GENERAL DECISION: MD20080004 02/08/2008 MD4

Date: February 8, 2008
General Decision Number: MD20080004 02/08/2008

Superseded General Decision Number: MD20070004

State: Maryland

Construction Types: Highway

Counties: Caroline, **Dorchester**, Kent, **Somerset**, St Mary's, Talbot, **Wicomico** and **Worcester** Counties in Maryland.

HIGHWAY CONSTRUCTION PROJECTS (Excluding tunnels, building structures in rest area projects and railroad construction; bascule, suspension and spandrel arch bridges; bridges designed for commercial navigation; bridges involving marine construction; and other major bridges)

Modification Number	Publication Date
0	02/08/2008

SUMD1999-001 09/29/1999

	Rates	Fringes
Carpenter	$ 14.23	2.48
Cement Mason/Finisher	$ 12.69	
Laborers:		
General (Including Flaggers and Rakers)	$ 8.15	1.58
Power equipment operators:		
Asphalt Distributors	$ 10.85	1.74
Backhoes	$ 11.42	1.36
Bulldozers	$ 11.51	2.27
Cranes	$ 15.97	2.15
Gradalls	$ 14.50	.92
Graders	$ 12.35	2.08
Loaders	$ 10.31	1.41
Pavers	$ 11.72	2.13
Piledrivers	$ 14.00	3.45
Power Broom	$ 8.15	1.58
Rollers	$ 8.97	1.82
Screeds	$ 9.37	2.07
Truck Driver, Dump	$ 8.99	1.26

WELDERS - Receive rate prescribed for craft performing operation to which welding is incidental.

==========

Unlisted classifications needed for work not included within the scope of the classifications listed may be added after award only as provided in the labor standards contract clauses (29CFR 5.5 (a) (1) (ii)).

In the listing above, the "SU" designation means that rates listed under the identifier do not reflect collectively bargained wage and fringe benefit rates. Other designations indicate unions whose rates have been determined to be prevailing.

WAGE DETERMINATION APPEALS PROCESS

1.) Has there been an initial decision in the matter? This can be:

* an existing published wage determination
* a survey underlying a wage determination
* a Wage and Hour Division letter setting forth a position on a wage determination matter
* a conformance (additional classification and rate) ruling

On survey related matters, initial contact, including requests for summaries of surveys, should be with the Wage and Hour Regional Office for the area in which the survey was conducted because those Regional Offices have responsibility for the Davis-Bacon survey program. If the response from this initial contact is not satisfactory, then the process described in 2.) and 3.) should be followed.

With regard to any other matter not yet ripe for the formal process described here, initial contact should be with the Branch of Construction Wage Determinations. Write to:

Branch of Construction Wage Determinations
Wage and Hour Division
U.S. Department of Labor
200 Constitution Avenue, N.W.
Washington, DC 20210

2.) If the answer to the question in 1.) is yes, then an interested party (those affected by the action) can request review and reconsideration from the Wage and Hour Administrator (See 29 CFR Part 1.8 and 29 CFR Part 7). Write to:

Wage and Hour Administrator
U.S. Department of Labor
200 Constitution Avenue, N.W.
Washington, DC 20210

The request should be accompanied by a full statement of the interested party's position and by any information (wage payment data, project description, area practice material, etc.) that the requestor considers relevant to the issue.

3.) If the decision of the Administrator is not favorable, an interested party may appeal directly to the Administrative Review Board (formerly the Wage Appeals Board). Write to:

Administrative Review Board
U.S. Department of Labor
200 Constitution Avenue, N.W.
Washington, DC 20210

4.) All decisions by the Administrative Review Board are final.

==========

END OF GENERAL DECISION

NOTICE OF ACTIONS REQUIRED FOR AFFIRMATIVE ACTION TO ENSURE EQUAL EMPLOYMENT OPPORTUNITY (EXECUTIVE ORDER 11246)

1. The Offeror's or Bidders attention is called to the "Equal Opportunity Clause" and the "Standard Federal Equal Employment Specifications" set forth herein.

2. The goals and timetables for minority and female participation, expressed in percentage terms for the Contractor's aggregate work force in each trade on all construction work in the covered area, are as noted in Appendix A and B:

These goals are applicable to all the Contractors' construction work (whether or not it is Federal or federally assisted) performed in the covered area. If the contractor performs construction work in a geographical area located outside of the covered area, it shall apply the goals established for such geographical area where the work is actually performed. With regard to this second area, the contractor also is subject to the goals for both its federally involved and nonfederally involved construction.

The contractor's compliance with the Executive Order and the regulations in 41 CFR Part 60-4 shall be based on its implementation of the Equal Opportunity Clause, specific affirmative action obligations required by the specifications set forth in 41 CFR 60-4.3(a), and its efforts to meet the goals. The hours of minority and female employment and training must be substantially uniform throughout the length of contract, and in each trade, and the contractor shall make a good faith effort to employ minorities and women evenly on each of its projects. The transfer of minority or female employees or trainees from Contractor to Contractor or from project to project for the sole purpose of meeting the contractor's goals shall be a violation of the contract, the Executive Order and the regulations in 41 CFR Part 60-4. Compliance with the goals will be measured against the total work hours performed.

3. The Contractor shall provide written notification to the Director of the Office of Federal Contract Compliance Programs within 10 working days of award of any construction subcontract in excess of $10,000 at any tier for construction work under the contract resulting from this notification. The notification shall list the name, address, and telephone number of the subcontractor; employer identification number of the subcontractor; estimated dollar amount of the subcontract; estimated starting and completion dates of the subcontract; and the geographical area in which the subcontract is to be performed.

4. As used in this Notice, and in the contract resulting from this solicitation, the "covered area" is noted on appendix B.

STANDARD FEDERAL EQUAL EMPLOYMENT OPPORTUNITY CONSTRUCTION CONTRACT SPECIFICATIONS (Executive Order 11246)

1. As used in these specifications:

a. "Covered area" means the geographical area described in the solicitation from which this contract resulted;

b. "Director" means Director, Office of Federal Contract Compliance Programs, United States Department of Labor, or any person to whom the Director delegates authority;

c. "Employer identification number" means the Federal Social Security number used on the Employer's Quarterly Federal Tax Return, U.S. Treasury Department Form 941.

d. "Minority" includes:

(i) Black (all persons having origins in any of the Black African racial groups not of Hispanic origin);

(ii) Hispanic (all persons of Mexican, Puerto Rican, Cuban, Central or South American or other Spanish culture or origin regardless of race);

(iii) Asian and Pacific Islander (all persons having origins in any of the original people of the Far East, Southeast Asia, the Indian Subcontinent, or the Pacific Islands); and,

(iv) American Indians or Alaskan Native (all persons having origins in any of the original peoples of North America and maintaining identifiable tribal affiliations through membership and participation or community identification).

2. Whenever the Contractor, or any Subcontractor at any tier, subcontracts a portion of the work involving any construction trade, it shall physically include in each subcontract in excess of $10,000 the provisions of these specifications and the Notice which contains the applicable goals for minority and female participation and which is set forth in the solicitations from which this contract resulted.

3. If the Contractor is participating (pursuant to 41 CFR 60-4.5) in a Hometown Plan approved by the U.S. Department of Labor in the covered area either individually or through an association, its affirmative action obligations on all work in the Plan area (including goals and timetables) shall be in accordance with that Plan for those trades which have unions participating in the Plan. Contractors must be able to demonstrate their participation in and compliance with the provisions of any such Hometown Plan. Each Contractor or Subcontractor participating in an approved Plan is individually required to comply with its obligations under the EEO clause, and to make a good faith effort to achieve each goal under the Plan in each trade in which it has employees. The overall good faith performance by other Contractors or Subcontractors toward a goal in an approved Plan does not excuse any covered Contractor's or Subcontractor's failure to take good faith efforts to achieve the Plan goals and timetables.

4. The Contractor shall implement the specific affirmative action standards provided in paragraphs 7.a through 7.p of these specifications. The goals set forth in the solicitation from which this contract resulted are expressed as percentages of the total hours of employment and training of minority and female utilization the Contractor should reasonably be able to achieve in each construction trade in which it has employees in the covered area. The Contractor is expected to make substantially uniform progress toward its goal in each craft during the period specified.

5. Neither the provisions of any collective bargaining agreement, nor the failure by a union with whom the Contractor has a collective bargaining agreement, to refer either minorities or women shall excuse the Contractor's obligations under these specifications, Executive Order 11246, or the regulations promulgated pursuant thereto.

6. In order for the nonworking training hours of apprentices and trainees to be counted in meeting the goals, such apprentices and trainees must be employed by the Contractor during the training period, and the Contractor must have made a commitment to employ the apprentices and trainees at the completion of their training, subject to the availability of employment opportunities. Trainees must be trained pursuant to training programs approved by the U.S. Department of Labor.

7. The Contractor shall take specific affirmative actions to ensure equal employment opportunity. The evaluation of the Contractor's compliance with these specifications shall be based upon its effort to achieve maximum results from its actions. The Contractor shall document these efforts fully, and shall implement affirmative action steps at least as extensive as the following:

a. Ensure and maintain a working environment free of harassment, intimidation, and coercion at all sites, and in all facilities at which the Contractor's employees are assigned to work. The Contractor, where possible, will assign two or more women to each construction project. The Contractor shall specifically ensure that all foremen, superintendents, and other on-site supervisory personnel are aware of and carry out the Contractor's obligation to maintain such a working environment, with specific attention to minority or female individuals working at such sites or in such facilities.

b. Establish and maintain a current list of minority and female recruitment sources, provide written notification to minority and female recruitment sources and to community organizations when the Contractor or its unions have employment opportunities available, and maintain a record of the organizations' responses.

c. Maintain a current file of the names, addresses and telephone numbers of each minority and female off-the-street applicant and minority or female referral from a union, a recruitment source or community organization and of what action was taken with respect to each such individual. If such individual was sent to the union hiring hall for referral and was not referred back to the Contractor by the union or, if referred, not employed by the Contractor, this shall be documented in the file with reason therefore, along with whatever additional actions the Contractor may have taken.

d. Provide immediate written notification to the Director when the union or unions with which the Contractor has a collective bargaining agreement has not referred to the Contractor a minority person or woman sent by the Contractor, or when the Contractor has other information that the union referral process has impeded the Contractor's efforts to meet its obligations.

e. Develop on-the-job training opportunities and/or participate in training programs for the area which expressly include minorities and women, including upgrading programs and apprenticeship and trainee programs relevant to the contractor's employment needs, especially those programs funded or approved by the Department of Labor. The Contractor shall provide notice of these programs to the sources compiled under 7.b above.

f. Disseminate the Contractor's EEO policy by providing notice of the policy to unions and training programs and requesting their cooperation in assisting the Contractor in meeting its EEO obligations; by including it in any policy manual and collective bargaining agreement; by publicizing it in the company newspaper, annual report, etc.; by specific review of the

policy with all management personnel and with all minority and female employees at least once a year and by posting the company EEO policy on bulletin boards accessible to all employees at each location where construction work is performed.

g. Review, at least annually, the company's EEO Policy and affirmative action obligations under these specifications with all employees having any responsibility for hiring, assignment, layoff, termination or other employment decisions including specific review of these items with on-site supervisory personnel such as Superintendents, General Foremen, etc., prior to the initiation of construction work at any job site. A written record shall be made and maintained identifying the time and place of these meetings, persons attending, subject matter discussed, and disposition of the subject matter.

h. Disseminate the Contractor's EEO policy externally by including it in any advertising in the news media, specifically including minority and female news media, and providing written notification to and discussing the Contractor's EEO policy with other Contractors and Subcontractors with whom the Contractor does or anticipates doing business.

i. Direct its recruitment efforts, both oral and written, to minority, female and community organizations, to schools with minority and female students and to minority and female recruitment and training organizations serving the Contractor's recruitment area and employment needs. Not later than one month prior to the date for the acceptance of applications for apprenticeship or other training by any recruitment source, the Contractor shall send written notification to organizations such as the above, describing the openings, screening procedures, and tests to be used in the selection process.

j. Encourage present minority and female employees to recruit other minority persons and women and, where reasonable, provide after school, summer and vacation employment to minority and female youth both on the site and in other areas of a Contractor's work force.

k. Validate all tests and other selection requirements where there is an obligation to do so under 41 CFR Part 60-3.

l. Conduct, at least annually, an inventory and evaluation at least of all minority and female personnel for promotional opportunities and encourage these employees to seek or to prepare for, through appropriate training, etc., such opportunities.

m. Ensure that seniority practices, job classifications, work assignments and other personnel practices, do not have a discriminatory effect by continually monitoring all personnel and employment related activities to insure that the EEO policy and the Contractor's obligations under these specifications are being carried out.

n. Ensure that all facilities and company activities are nonsegregated except that separate or single-user toilet and necessary changing facilities shall be provided to assure privacy between the sexes.

o. Document and maintain a record of all solicitations of offers for subcontracts from minority and female construction contractors and suppliers, including circulation of solicitations to minority and female contractor associations and other business associations.

p. Conduct a review, at least annually, of all supervisors' adherence to and performance under the Contractor's EEO policies and affirmative action obligations.

8. Contractors are encouraged to participate in voluntary associations which assist in fulfilling one or more of their affirmative action obligations (7.a through 7.p). The efforts of a contractor association, joint contractor-union, contractor-community, or other similar group of which the contractor is a member and participant, may be asserted as fulfilling any one or more if its obligations under 7.a through 7.p of these specifications provided that the contractor actively participates in the group, makes every effort to assure that the group has a positive impact on the employment of minorities and women in the industry, ensures that the concrete benefits of the program are reflected in the Contractor's minority and female work force participation, makes a good faith effort to meet its individual goals and timetables, and can provide access to documentation which demonstrates the effectiveness of actions taken on behalf of the Contractor. The obligation to comply, however, is the Contractor's and failure of such a group to fulfill an obligation shall not be a defense for the Contractor's non-compliance.

9. A single goal for minorities and a separate single goal for women have been established. The Contractor, however, is required to provide equal employment opportunity and to take affirmative action for all minority groups, both male and female, and all women, both minority and non-minority. Consequently, the Contractor may be in violation of the Executive Order if a particular group is employed in a substantially disparate manner (for example, even though the Contractor has achieved its goals for women generally the Contractor may be in violation of the Executive Order if a specific minority group of women is underutilized).

10. The Contractor shall not use the goals and timetables or affirmative action standards to discriminate against any person because of race, color, religion, sex, or national origin.

11. The Contractor shall not enter into any Subcontract with any person or firm debarred from Government contracts pursuant to Executive Order 11246.

12. The Contractor shall carry out such sanctions and penalties for violation of these specifications and of the Equal Opportunity Clause, including suspension, termination and cancellation of existing subcontracts as may be imposed or ordered pursuant to Executive Order 11246, as amended, and its implementing regulations, by the Office of Federal Contract Compliance Programs. Any Contractor who fails to carry out such sanctions and penalties shall be in violation of these specifications and Executive Order 11246, as amended.

13. The Contractor, in fulfilling its obligations under these specifications, shall implement specific affirmative action steps, at least as extensive as those standards prescribed in paragraph 7 of these specifications, so as to achieve maximum results from its efforts to ensure equal employment opportunity. If the Contractor fails to comply with the requirements of the Executive Order, the implementing regulations, or these specifications, the Director shall proceed in accordance with 41 CFR 60-4.8.

14. The Contractors shall designate a responsible official to monitor all employment related activity to ensure that the company EEO policy is being carried out to submit reports relating to the provisions hereof as may be required by the Government and to keep records. Records shall at affiliation if any, employee identification number when assigned, social security number, race, sex, status (e.g., mechanic, apprentice, trainee, helper, or laborer), dates of changes in status, hours worked per week in the indicated trade, rate of pay, and locations at which the work was performed. Records shall be maintained in an easily understandable and

retrievable form; however, to the degree that existing records satisfy this requirement, contractors shall not be required to maintain separate records.

15. Nothing herein provided shall be construed as a limitation upon the application of other laws which establish different standards of compliance or upon the application of requirements for the hiring of local or other area residents

(a.g., those under the Public Works Employment Act of 1977 and the Community Development Block Grant Program).

16. The Contractor will receive at the time of Award Federal Form CC-257 for his use in reporting monthly the Affirmative Actions for minority and female which he has employed.

APPENDIX A

The following goals and timetables for female utilization shall be included in all Federal and federally assisted construction contracts and subcontracts in excess of $10,000. The goals are applicable to the Contractor's aggregate on-site construction work force whether or not part of that work force is performing on a Federal or federally assisted construction contract or subcontract.

AREA COVERED: Nationwide

GOALS AND TIMETABLES

Timetable	Goals (percent)
From April 1, 1978 until March 31, 1979	3.1
From April 1, 1979 until March 31, 1980	5.0
From April 1, 1980 until further notice	6.9

APPENDIX B

Until further notice, the following goals for minority utilization in each construction craft and trade shall be included in all Federal or federally assisted construction contracts and subcontracts in excess of $10,000 to be performed in the respective geographical areas. The goals are applicable to each nonexempt contractor's total on-site construction work force, regardless of whether or not part of that work force is performing work on a Federal, federally assisted or nonfederally related project, contract or subcontract.

Construction contractors which are participating in an approved Hometown Plan (see 41 CFR 60-4.5) are required to comply with the goals of the Hometown Plan with regard to construction work they perform in the area covered by the Hometown Plan. With regard to all their other covered construction work such contractors are required to comply with the applicable SMSA or EA goal contained in this appendix B-80.

State	Goal (percent)
Maryland:	
019 Baltimore, MD:	
SMSA Counties:	
0720 Baltimore, MD	23.0
MD Anne Arundel; MD Baltimore;	
MD Carroll; MD Harford;	
MD Howard; MD Baltimore City	
Non-SMSA Counties	23.6
MD Caroline; MD Dorchester;	
MD Kent; MD Queen Annes;	
MD Somerset; MD Talbot;	
MD Wicomico; MD Worcestar	
Washington, DC:	
020 Washington, DC:	
SMSA Counties:	
8840 Washington, DC	28.0
MD Charles; MD Montgomery;	
MD Prince Georges	
Non-SMSA Counties	25.2
MD Calvert; MD Frederick	
MD St. Marys; MD Washington	
Pennsylvania	
Non-SMSA Counties	4.8
MD Allegany: MD Garrett	

TRAINING PROVISIONS

As part of the Contract's Equal Employment Opportunity Affirmative Action Program, on-the-job training shall be provided as follows:

The on-the-job training shall be aimed at developing full journeypersons in the type of trade or job classification involved. On this Contract **0 (ZERO)** persons will be trained.

In the event that a Contractor subcontracts a portion of the Contract work, the Contractor shall determine how many, if any, of the trainees are to be trained by the subcontractor, however, the Contractor shall retain the primary responsibility for meeting the training requirements imposed by this Provision. The Contractor shall also insure that this training Provision is physically included in each subcontract to insure that the workforce utilized by the subcontractor meet the goals for minority and female employment and training. Where feasible, 25 percent of apprentices or trainees in each occupation shall be in their first year of apprenticeship or training.

The number of trainees in each classification shall be distributed among the work classifications on the basis of the Contractor's needs, minority and women employment goals specified for each trade in the Contract Provision, and the reasonable area of recruitment.

Prior to beginning construction, the Contractor shall submit to the Administration for approval a Manpower and Training Utilization (MTU) Schedule no later than at the preconstruction meeting.

The MTU schedule shall include:

1. The proposed training programs.
2. The number of trainees to be trained in each classification.
3. Anticipated starting and ending dates for training in each classification.

No Contract work may be undertaken until the Administration has accepted the schedule.

If the submitted training programs fail to meet the requirements as defined within these Provisions, the Administration will withhold one percent of the total category code one pay items from the payment due the Contractor. The Contractor shall submit a revised Manpower and Training Utilization Schedule when major changes in the Contract work schedule occur that substantially affect the previously submitted schedule.

The Contractor shall be credited for each trainee employee who is currently enrolled or becomes enrolled in an approved program and will be reimbursed for the hourly cost of the trainee as specified in the schedule of prices.

Training and upgrading of minorities and women toward journeyperson status is a primary objective of this Training Provision. The purpose for this objective is to insure a pool of qualified minorities and women to replace those journeypersons who, in the natural course of events will leave the workforce. The program will also provide opportunities to the minorities and women trainees in geographic areas where shortages in minority and women journeypersons are prevalent and recognized due to the Contractor's inability to meet the Equal Employment Opportunity goals specified in this Contract.

The training requirements of this Training Provision are not intended nor shall they be used to discriminate against any applicant for training, whether a member of a protected class or not. It is

the Contractor's responsibility to demonstrate good faith efforts to ensure an adequate workforce representation of minorities and women in all job classifications on this Contract. Therefore, the Contractor shall consider the employment Contract goals set for minorities and females when enrolling trainees. The Contractor's utilization of the on-the-job training goals will be weighed when an Equal Employment Opportunity workforce compliance determination is made.

The Contractor shall make every effort to enroll minority and women trainees (e.g., by conducting systematic and direct recruitment through public and private sources likely to yield minorities and women to the extent that these persons are available within a reasonable area of recruitment).

No employee shall be employed as a trainee in any classification which the individual has successfully completed a training program leading to journeyperson status or has been employed as a journeyperson. This includes a person gainfully employed as a journeyperson by virtue of informal on-the-job training. The Contractor should satisfy this requirement by including appropriate questions in the employee job application or by other suitable means. Regardless of the method used, the Contractor's records shall document the findings in each case. In the case of apprentices, evidence of indentureship and registration of the approved apprenticeship program shall be included in the Contractor's records.

The minimum length and type of training and rate for each classification shall be specified in the training program by the Contractor and approved by the Administration and the Federal Highway Administration.

The Administration will approve any program specified in the Administration's On-The-Job Training Manual. The Administration and the Federal Highway Administration will consider other programs if it is reasonably calculated that the programs conform to the Equal Employment Opportunity obligations of the Contract and will qualify the average trainee for journeyperson status in the specified classification by the end of the training period. Apprenticeship programs registered with the U.S. Department of Labor, Bureau of Apprenticeship and Training, or with a State apprenticeship agency recognized by the Bureau, and training programs approved by, but not necessarily sponsored by the U.S. Department of Labor, Employment and Training Administration, Bureau of Apprenticeship and Training will also be acceptable, provided that the program being offered is administered in a manner consistent with the Equal Employment obligation of Federal-aid highway construction Contracts and meets the minimum requirements of this Training Provision.

Some offsite training is permissible as long as the training is an integral part of an approved training program and does not comprise a significant part of the overall training.

Unless otherwise specified, the Contractor will be reimbursed 80 cents per hour of training given an employee on this Contract in conformance with an approved training program. As approved by the Engineer, reimbursement will be made for training persons in excess of the number specified herein. This reimbursement will be made even though the Contractor received additional training program funds from other sources, provided that the other sources do not specifically prohibit the Contractor from receiving other reimbursement. Reimbursement for offsite training indicated above will only be made to the Contractor where the Contractor does one or more of the following and the trainees are concurrently employed on a Federal-aid project:

1. Contributes to the cost of the training.

2. Provides the instruction to the trainee or pays the trainee's wages during the offsite training period.

No payment will be made to the Contractor if either the failure to provide the required training, or the failure to hire the trainee as a journeyperson is caused by the Contractor and evidences a lack of "good faith" on the part of the Contractor in meeting the requirements of this Training Provision. It is normally expected that a trainee will begin training on the project as soon as feasible after the start of work utilizing the skill involved and remain on the project as long as training opportunities exist in the work classification or until the program is completed. It is not required that all trainees be on board for the entire length of the Contract. A Contractor will have fulfilled their responsibilities under this Training Provision when:

1. Systematic and direct recruitment likely to yield qualified minority and women applicants is conducted through:

a. Public and private referral sources.

b. Advising the existing workforce of training opportunities.

c. Unions (if applicable).

2. Acceptable training has been provided to trainees enrolled in the program.

3. The number of specified trainees have completed the minimum hours required in an approved training program.

4. Trainees completing approved programs are retained in the workforce as journeypersons.

The Contractor shall pay the trainees at least 60 percent of the appropriate minimum journeyperson's hourly rate plus the full fringe benefits specified in the Contract for the first half of the training period, 75 percent for the third quarter of the training period plus full fringe benefits, and 90 percent for the last quarter of the training period plus full fringe benefits. However, in no case shall the total hourly rate be less than the U.S. Department of Labor's unskilled laborer wage rate for the project. In addition, all trainees shall be identified as such on the certified payroll.

The Contractor shall furnish the trainee a copy of the approved training program in which the trainee is enrolled. The Contractor shall provide each trainee with a certificate showing the type and length of training satisfactorily completed. The Contractor shall submit a Certificate to the trainee in the following instances:

1. Certificate of Completion when a trainee completes the total number of hours required to complete a training program.

2. Certificate of Training when a trainee does not totally complete the required program hours.

The Contractor shall provide for the maintenance of records and furnish periodic reports inclusive of the Administration's Contractor's Semiannual Training Reports, documenting his performance under this Training Provision. The Semiannual Training Report is to be submitted by the 10th of the month following the reporting period (July 10 and January 10).

If the Contractor fails to fully comply with these Training Provisions, the Administration's Representative will make a final report of non compliance to the Administrator, who may direct the imposition of one or both of the sanctions listed below:

1. Withholding a percentage of the progress payment.

2. Other action appropriate and/or within the discretion of the Administrator.

NOTICE TO ALL HOLDERS OF THIS CONTRACT DOCUMENT

HIGH VISIBILITY SAFETY APPAREL POLICY

BACKGROUND. Research indicates that high visibility garments have a significant impact on the safety of employees who work on highways and rights-of-way. In addition, high visibility garments may help to prevent injuries and accidents and to make highway workers more visible to the motoring public, which ultimately improves traffic safety.

STATEMENT OF POLICY.

(a) The High Visibility Safety Apparel Policy provides a standardized apparel program.

(b) The program seeks to improve the visibility of all persons who work on Administration highways and rights-of-way.

(c) All apparel shall contain the appropriate class identification label.

(d) Compliance with this policy is retroactive and becomes effective immediately. All affected employees shall receive high visibility apparel awareness training.

APPLICABILITY. This policy applies to all Administration employees and all other persons who work on Administration highways and rights-of-way. All workers shall wear, at a minimum, Class 2 ANSI/ISEA 107/2004 apparel.

(a) For Administration employees, this apparel shall have a fluorescent yellow-green background material color and be the outermost garment worn.

(b) Retro-reflective material color for Administration employee apparel shall be silver or white and be visible at a minimum distance of 1,000 feet. The retro-reflective safety apparel shall be designed to clearly recognize and differentiate the wearer from the surrounding work environment. The retro-reflective material may be contrasted by fluorescent orange background material not exceeding one and one half inches on either side of the retro-reflective material.

(c) For non-Administration employees, this apparel shall be either fluorescent orange-red or fluorescent yellow-green background material color and be the outermost garment worn.

(d) Retro-reflective material color for non-Administration employee apparel shall either be orange, yellow, white, silver, yellow-green, or a fluorescent version of these colors, and be visible at a minimum distance of 1,000 feet. The retro-reflective safety apparel shall be designed to clearly recognize and differentiate the wearer from the surrounding work environment.

REFERENCES.

(a) ANSI/ISEA 107/2004 standard – American National Safety Institute/International Safety Equipment Association

(b) MUTCD 2003 – Manual for Uniform Traffic Control Devices - Sections 6D.03B and 6E.02

(c) Visibility Research – The VCTR 1989 report concludes that fluorescent colors, when compared with non-fluorescent colors, enhance the daytime conspicuity of worker clothing.

DEFINITIONS.

(a) Apparel – The outermost high-visibility garment worn by employees who work on Administration highways and rights-of-way.

(b) Highways – All roads owned by the Maryland Department of Transportation and maintained by the Administration.

(c) High Visibility – The ability for workers to be distinguishable as human forms to be seen, day and night, at distances that allow equipment operators and motorists to see, recognize, and respond.

PROJECT DESCRIPTION

This project, located in Dorchester, Somerset, Wicomico, and Worcester Counties, is for installing new median traffic barrier and rehabilitating existing w-beam traffic barrier systems at various locations within District 1. In Dorchester County, the project limits consists of 16.9 miles of US 50. In Somerset County, the project limits consists of 0.5 miles of US 13. In Wicomico County, the project limits consists of 3.8 miles of US 13 and 7.0 miles of US 50. In Worcester County, the project limits consists of 6.0 miles of US 13, 1.3 miles of US 50, and 4.0 miles of US 113. Schematic drawings with instructions for each w-beam system improvement will be provided post notice to proceed.

Nonconforming w-beam systems were identified within the named project limits during an inventory. The focus of this project will be as follows:

(a) To upgrade existing outdated end treatments located within thirty feet of a travel lane.

(b) To improve existing traffic barrier systems that are nonconforming in height, length and/or slope.

(c) To add a continuous median barrier system that conforms to SHA guidelines for Traffic Barrier Placement & End Treatment Design (2006).

The rehabilitation will involve minor re-grading at end treatments and in front of W-Beam barriers, and installing appropriate types of SHA standard end treatments.

The project involves the installation, upgrade, replacement, and resetting at the following barrier offset locations (Refer to Special Provision description for Barrier System Typical Section Locations):

(a) Roadside (Locations L1 and R1).

(b) Median (Locations L2, C, and R2).

The work generally includes the following activities:

(a) Below is the anticipated sequence of construction activities.

(1) Set up the Maintenance of Traffic (MOT).

(2) Construct an amount of the w-beam system that can be completed within the work hour restrictions. For public safety w-beam systems cannot be left in an unfinished condition when the MOT is removed.

(3) Perform any surface grading adjustments by placing and compacting topsoil. All grading activities shall occur only during dry weather unless erosion and sediment controls are in place.

(4) Reset or install new w-beam systems.

(5) Stabilize with topsoil, seed, and mulch all disturbed areas within 24 hours.

(6) Mechanically clean construction vehicle wheels prior to departing from the project site.

(7) Remove MOT devices and open the lane/shoulder to traffic.

SPECIFICATIONS

All work on this project shall conform to the Maryland Department of Transportation, State Highway Administration's Specifications entitled, "Standard Specifications for Construction and Materials" dated July 2008 revisions thereof, or additions thereto, and the Special Provisions included in this Invitation for Bids.

In case of discrepancy between the Special Provisions and all other provisions contained in the contract, the Engineer shall be the sole authority as to the proper procedure to follow.

EMPLOYMENT AGENCY

The Maryland Department of Human Resources is located at:

DORCHESTER COUNTY
Dorchester County One Stop Center
627A Race Road
Cambridge, Maryland 21613
Phone: (410) 901-4250

SOMERSET, WICOMICO COUNTY, AND WORCESTER COUNTIES
One Stop Job Market
917 Mount Hermon Road, Suite 1
Salisbury, Maryland 21804
Phone: (410)341-6515

DEFINITION OF TRAFFIC BARRIER SYSTEM

A barrier system is generally defined as consisting of a starting end-treatment and stopping end-treatment connected by either a traffic barrier w-beam (single sided), a median traffic barrier w-beam (two-sided), or a modified barrier (single or double sided). However, in some instances a single w-beam barrier will change to a two-sided w-beam median barrier (or vice versa). At the connection one system stops and the next system starts.

NOTICE TO CONTRACTOR

SPECIAL NOTE—CONSTRUCTION ITEMS AND QUANTITIES

All construction items and quantities in these Special Provisions are provided in the contract for use when and as directed by the Engineer. The quantities for these items are approximate and may be increased or decreased without any adjustment to the contract unit price or the item(s) may be deleted entirely from the contract by the Engineer without negotiation. Required items not listed or described in the Contract Documents are to be negotiated between the Administration and the Contractor at the time of need. Once a negotiated price is established, it will be used for the remainder of the contract. The Contractor will not be allowed to submit a claim against the State Highway Administration for any adjustment to the contract unit price should the item(s) be increased, decrease, or eliminated.

PROJECT SCHEDULE. Section 109 shall only apply when a CPM Project Schedule item is included in the Schedule of Prices. Otherwise, all Project Schedules shall conform to Section 110.

NOTICE TO BIDDERS. The proposal Form Packet in this Invitation for Bids requires the following information be submitted for the Bidder and each firm quoting or considered as subcontractors:

a) Name of firm.

b) Address of firm

c) MBE, Non-MBE, DBE, or Non-DBE

d) Age of firm.

e) Annual gross receipts per last calendar.

Note that there are provisions for submitting copies for additional subcontractors, and that an "X" is required to indicate whether or not additional copies have been submitted.

BOOK OF STANDARDS. The Book of Standards for Highway and Incidental Structures is now available only on the Administration's Internet Site at www.marylandroads.com. The Book of Standards can be located by clicking on Business with SHA; Business Standards and Specifications; and Book of Standards for Highway and Incidental Structures. Hard copies of the Book of Standards will no longer be sold in the Cashiers Office and hard copy distributions of the Standard updates will no longer be made.

PAYMENT OF STATE OBLIGATIONS. Electronic funds transfer will be used by the State to pay the Contractor for any Contract expected to exceed $200,000 and any other State payments unless the State Comptroller's Office grants the Contractor an exemption.

Therefore, by submitting a response to this solicitation, the Bidder/Offer agrees to accept payment by electronic funds transfer unless the State Comptroller's Office grants an exemption.

Prior to the Award of the Contract the selected Bidder/Offer shall register using the X-10 Vendor Electronic funds (EFT) Registration Request Form. The instructions and the form are located on the internet at compnet.comp.state.md.us/gad.

Any request for exemption shall be submitted to the State Comptroller's Office at the address specified on the X-10 form and shall include the business identification information as stated on the form and include the reason for the exemption.

WORK SCHEDULE LIQUIDATED DAMAGES

The Contractor shall begin work per site within ten (10) work days after notification by the Engineer and shall continue until completion of all work at a designated location. If the Contractor fails to begin work within ten (10) days of notification, the sum of **$ 500.00** per working day will be assessed as liquidated damages for each working day beyond the ten (10) day notification period.

REQUEST FOR INFORMATION. Any information regarding the requirements or the interpretation of any provision of the Contract Documents shall be requested, in writing, and delivered prior to the scheduled date of bid opening. Responses to questions or inquiries having any material effect on the bids shall be made by written addenda sent to all prospective bidders. The Administration will not respond to telephone requests for information concerning this invitation for bids that would materially affect the bid.

Written requests for information or questions shall be addressed to:

Mr. Kirk G. McClelland
Director, Office of Highway Development
Attention: Ms. Barb Solberg/ Christina Lavoie
707 North Calvert Street
Baltimore, MD 21202
or
FAX to (410) 209-5001

Each request for information or questions shall include the Contract number and the name and address of the originator.

SPECIAL STABILIZATION NOTE

Following initial disturbance or re-disturbance, permanent or temporary stabilization shall be completed within 24 hours of all disturbed or graded areas on the project site. This statement supersedes all other stabilization requirements found in the contract documents and specifications.

RIGHT OF WAY STATUS

No additional right-of-way is anticipated for this project. The Contractor shall not perform work outside of the State Highway Administration Right-of-Way without written Right-of-Entry.

REQUIRED PERMITS

Stormwater Management and Erosion and Sediment Control Approval is required. Refer to Section 308 of these specifications.

BARRIER SYSTEM TYPICAL SECTION LOCATIONS

Barrier systems are located at one of the five offset locations depicted by the typical roadway section shown below. The locations outside left (L1), inside left (L2), center (C), inside right (R2), outside right (R1) are defined in the direction of increasing mile point.

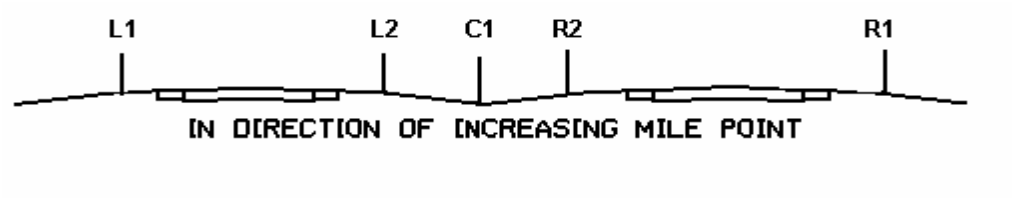

Five Typical Barrier Locations

NOTICE TO CONTRACTOR

EARLY SUBMISSIONS. The last sentence of the first paragraph of TC-5.02, "No work shall be started before receipt of the Notice to Proceed" shall not apply to the following:

After notification to the Contractor from the Administration that the Contractor is the apparent low bidder, the Contractor will be permitted to provide a written request to the Engineer to submit documentation for materials sources and working drawings for any items of work that have a long lead time and could jeopardize the project schedule. Upon written approval from the Engineer the Contractor may submit the applicable documentation to the Engineer.

Should the Contract not be awarded to the apparent low bidder who meets the requirements of the Contract, GP-8.10 will apply for all costs accrued for the preparation and approval of the working drawings and any resultant material purchase approved by the District Engineer and steel fabricated in conformance with the approved working drawings between the date the Contractor received notice of apparent low bidder and the date of notice that the apparent low bidder will not be awarded this Contract.

Should this Contract not be awarded to the apparent low bidder due to failure of the Contractor to comply with all award and execution requirements, all costs accrued for the preparation of the specific items and any resultant material purchased and steel fabrication shall be borne by the Contractor.

Failure of the Contractor to submit the early submissions will not be basis for delaying issuance of the Notice to Proceed or be considered a reason for a time extension.

TERMS AND CONDITIONS

TC SECTION 4
CONTROL OF WORK

TC-4.02 FAILURE TO ADEQUATELY MAINTAIN PROJECT.

98 **ADD:** To the third paragraph.

Additionally, an appropriate deduction will be made from the Contractor's next progress estimate for each day or portion thereof that Maintenance of Traffic deficiencies exist, and will continue until the deficiencies are satisfactorily corrected and accepted by the Engineer. Any portion of a day will be assessed a full day deduction. The deduction will be equal to a prorata share of the lump sum price bid for Maintenance of Traffic or an amount prorated from the Engineer's estimate, whichever is more. The amount prorated will be the per diem amount established by using the working days (based upon calendar dates when required) divided into the total value of the bid item or the Engineer's estimate of that item, whichever is more.

The above noted deduction will be assessed on the next progress estimate if:

The Contractor does not take action to correct the deficiencies and properly assume the responsibilities of maintaining the project (as determined by the Engineer) within four hours of receiving a notice to comply with the required maintenance provisions.

The deduction will be equal to the daily prorated share of the lump sum price bid for Maintenance of Traffic or **$ 500** per day, whichever is more for each day or portion thereof that the deficiencies exist, and will continue until the deficiencies and proper assumption of the required maintenance provisions are satisfactorily corrected and accepted by the Engineer. The amount of monies deducted will be a permanent deduction and are not recoverable. Upon satisfactory correction of the deficiencies, payment of the Maintenance of Traffic lump sum item will resume.

CATEGORY 100
PRELIMINARY

SECTION 103 — ENGINEERS OFFICE

103.03 CONSTRUCTION.

144 **DELETE:** 103.03.06 Microcomputer System for all Offices in its entirety.

INSERT: The following.

103.03.06 Microcomputer System for all Offices.

(a) Desktop Unit.

(1) IBM compatible with an Intel or AMD processor.

(2) Minimum microprocessor speed of 3.0 GHz.

(3) Minimum hard drive storage of 80 GB (gigabyte).

(4) Minimum of 2 GB RAM (Random Access Memory).

(5) Enhanced 101 key keyboard with wrist rest.

(6) Super Video Graphics Accelerator (SVGA).

(7) Modem 56K BPS, ITU V.92 compliant – required for remote dial-in to the computer to provide MCMS system administration.

(8) Mouse with mouse pad.

(9) One CD-RW drive [re-writable CD-ROM].

(b) Operating System. Minimum Microsoft® Windows XP – all Microsoft Windows Critical Updates shall be installed prior to computer set up in the field office.

(c) Video Monitor. Flat-Panel LCD Monitor conforming to Energy Star requirements with a minimum screen size of 17 in.

(d) Printer. B&W Laser Jet Printer with a minimum resolution of 1200 DPI (dots per in.) and a minimum of 8 MB of RAM. Inkjets will not be accepted. Printer shall have a minimum print speed of 15 PPM (pages per minute).

(e) Software.

(1) Microsoft® Office 2007 Professional for Windows™ or later.

(2) Symantec® pcAnywhere32 for Windows™ version 12.0 or later.

(3) Antivirus software shall be installed and configured to perform an automatic update when the microcomputer system connects to the internet. Antivirus software approved for SHA web email: *Norton, McAfee, Sophos, or ETrust.

(*Norton Internet Security includes both Antivirus and a Personal Firewall).

(f) Internet Access. The microcomputer system shall be provided with unlimited Internet service approved by the Engineer. Where available internet high-speed service [DSL or cable] must be provided. With DSL or cable internet service an external Router device and firewall software are required to protect the computer from security intrusions. With DSL a Dual Outlet Modular Adapter [single-line RJ11] will be required to connect the DSL modem and the 56k dial-up modem to the same line.

(g) Accessories.

(1) Uninterruptible power supply (UPS).

(2) Standard computer workstation with minimum desk space of 60 X 30 in. and a swivel type office chair, padded with arm rests.

(3) 8-1/2 X 11 in. xerographic paper to be supplied as needed.

(4) Toner or ink as needed for printer.

(5) Maintenance agreement to provide for possible down time.

(6) Physical security system to deter theft of computer components.

(7) Three 1GB USB Flash Drive storage devices.

(8) Blank recordable CD-R media for re-writable CD-ROM drive to be supplied as needed.

(h) Notes.

(1) The microcomputer system shall be completely set up ready for use on or before the day the Engineers office is to be occupied.

(2) All software stated above shall be supplied on original disks with manuals and be retained in the construction field office for the duration of the Contract.

(3) If for any reason the system fails to operate, the system shall be replaced or repaired within 48 hours.

When the microcomputer system is no longer required, the Construction Management software system including original user/operator guide manuals, program disks, and all data files (including those stored on external media: USB flash drives, CD-R's, ZIP disks, etc.) will be removed by the Engineer and delivered to the District Engineer and become the property of the Administration. The remaining microcomputer system shall remain the property of the Contractor.

CATEGORY 100
PRELIMINARY

SECTION 104 — MAINTENANCE OF TRAFFIC

104.01 TRAFFIC CONTROL PLAN (TCP).

104.01.01 DESCRIPTION.

149 **DELETE:** The fourth paragraph "Refer to Contract documents for Work Restrictions." in its entirety.

INSERT: The following.

Work Restrictions. The Engineer reserves the right to modify or expand the methods of traffic control or working hours as specified in the Contract Documents. Any request from the Contractor to modify the work restrictions shall require written approval from the Engineer at least 72 hours prior to implementing the change. The Contractor shall submit a copy of the original work restrictions with the written request.

Work is not permitted on Saturdays or Sundays.

Work is not permitted on the holidays, or work day preceding and following holidays indicated below with an "X":

- ☒ New Year's Day, January 1
- ☐ Martin Luther King's Birthday, the third Monday in January
- ☐ President's Day, the third Monday in February
- ☒ Good Friday
- ☒ Easter Weekend
- ☒ Memorial Day, the last Monday in May
- ☒ Independence Day, July 4
- ☒ Labor Day, the first Monday in September
- ☐ Columbus Day, the second Monday in October
- ☐ Veteran's Day, November 11
- ☒ Thanksgiving Day, the fourth Thursday in November
- ☒ Christmas Day, December 25

TEMPORARY LANE OR SHOULDER CLOSURE SCHEDULE			
ROADWAY	**# LANE(S) / SHOULDER CAN BE CLOSED**	**DAY OF THE WEEK**	**CLOSURE PERIOD (TIME OF DAY)**
Divided-Uncontrolled Highway			
US 50/US 13/US 113			
From 10/1 – 5/14	1/1	M-F	Sunrise to Sunset
From 5/15 – 9/30	1/1	Tu – Thur Monday Friday	9:00 am – 3:00 pm 12:00 pm – 3:00 pm 9:00 am – 12:00 pm

150 **ADD:** The following after the last paragraph, "Any monetary savings...and the Administration."

When closing or opening a lane on freeways, expressways, and roadways with posted speed ≥ 55 mph, a work vehicle shall be closely followed by a protection vehicle (PV) during installation and removal of temporary traffic control devices. The PV shall consist of a work vehicle with approved flashing lights, a truck-mounted attenuator (TMA) with support structure designed for attaching the system to the work vehicle, and arrow panel (arrow mode for multilane roadways and caution mode on two-lane, two-way roadways) The work vehicle size and method of attachment shall be as specified in the TMA manufacture's specification as tested under NCHRP Test Level 3.

When a temporary lane or shoulder closure is in effect, work shall begin within one hour after the lane is closed. Any delay greater than one hour with no work in progress shall require the Contractor to remove the lane closure at no additional cost to the Administration. The Contractor's Traffic Manager shall attend Pre-Construction and Pre-Paving Meetings and shall discuss traffic control and the Traffic Control Plan including procedures to be implemented for lane closures.

All closures shall be in conformance with the approved TCP and under the direction of the Contractor's Traffic Manager and the Engineer.

Workers and equipment, including temporary traffic control devices needed for setting up a lane closure or restriction, are prohibited in the lane or shoulder to be closed or restricted before the time permitted in the Contract work restrictions unless otherwise noted below or as approved by the Engineer.

Temporary traffic control devices to be used for lane/shoulder closure may be placed on the shoulder of the roadway by workers no earlier than 15 minutes prior to actual time lane/shoulder closure or restriction is permitted. Temporary traffic signs may be displayed to traffic at this time.

Workers shall not enter a lane open to traffic. Workers may be present on shoulders to prepare for lane closure setup no earlier than 30 minutes prior to actual time lane/ shoulder closure or restriction is permitted.

All temporary lane and shoulder closures shall be restored at the end of the closure period and no travel lane shall be reduced to less than 10 ft. Prior to opening the closed lane or shoulder, the Contractor shall clear the lane or shoulder of all material, equipment, and debris.

Failure to restore full traffic capacity within the time specified will result in a deduction being assessed on the next progress estimate in conformance with the following. This is in addition to the requirements specified in TC-4.02.

ELAPSED TIME, MINUTES	DEDUCTION
1 - 5	$ 50.00
Over 5	$ 50.00 per Minute (In addition to the Original 5 minutes)

CATEGORY 200
GRADING

SECTION 203 — BORROW EXCAVATION

203.01.02 Notice to Contractor —Borrow Pits.

225 **ADD:** After the first paragraph.

This project is located in **DISTRICT 1**. The following conditions applicable to the county or city shall be complied with and documented.

DISTRICT 1

Dorchester (DO) County
Site plan approved by Soil Conservation District.
Grading permit from County Highway Department (except City of Cambridge).
Planning and Zoning approval for use.
Critical Areas approval (if applicable).
Inspection by County.

Somerset (SO) County
Site plan approved by Soil Conservation District.
Grading Permit from the County.
Land Use permit.
Critical Areas approval by Planning and Zoning (if applicable).
Inspection by SHA.

Wicomico (WI) County
Site plan approved by Soil Conservation District.
Certificate of compliance with Planning and Zoning if located in Critical Area.
Inspection by SHA.

Worcester (WO) County
Site plan approved by Soil Conservation District.
Critical areas approved by Planning and Zoning (if applicable).
Inspection by SHA.

DISTRICT 2

Caroline (CO), Cecil (CE), Queen Anne's (QA) and
Talbot (TA) Counties
Site plan approved by Soil Conservation District.
Planning and Zoning approval.
Critical Areas approval (if applicable).
Inspection by SHA.

Kent (KE) County
Site plan approved by Soil Conservation District.
Grading permit.
Planning and Zoning approval.
Critical Areas approval (if applicable).
Inspection by SHA.

DISTRICT 3

Montgomery (MO) County
Sediment control permit and plan approval by County
Department of Environmental Protection, Division of
Water Resources Management, Storm Water Management Section/Sediment Control.
Approval by Maryland National Capital Park and Planning Commission (if applicable).
Inspection by County.

Prince Georges (PG) County
Site Plan approved by Soil Conservation District.
County Grading Permit.
Tree conservation plan approval by Maryland National Capital Park and Planning Commission (if applicable).
Critical Areas approval (if applicable).
Payment of all pertinent county fees and/or securing of county required bonding.
Inspection by SHA with oversight by County.

DISTRICT 4

Baltimore (BA) County
Site Plan approved by the Department of Environmental Protection and the Soil Conservation District.
County Grading Permit.
Critical Areas approval by the Department of Environmental Protection and Resource Management (if applicable).
Inspection by County.

Harford (HA) County
Site Plan approved by Soil Conservation District.
County Grading Permit.
Critical Areas approval (if applicable).
Inspection by County.

DISTRICT 5

Anne Arundel (AA) County
Site Plan approved by Soil Conservation District.
Planning and zoning approval - special exception required.
Grading plan issued by the County Department of Inspections and Permits.
Critical Areas approval (if applicable).
Inspection by County and SHA.

Calvert (CA) County
Site Plan approved by Soil Conservation District.
Grading plan issued by the County after a mining permit or exemption is issued.
Critical Areas approval (if applicable).
Inspection by SHA.

Charles (CH) County
Site Plan approved by Soil Conservation District.
Special exception granted by the County.
Critical Areas approval (if applicable).
Inspection by SHA.

St. Marys (SM) County
Site Plan approved by Soil Conservation District.
County Grading Permit.
Critical Areas approval (if applicable).
Inspection by SHA.

DISTRICT 6

Allegany (AL) County
Site plan approved by Soil Conservation District.
Informational copy of plans to County Planning and Zoning Commission.
Inspection by SHA.

Garrett (GA) and Washington (WA) Counties
Site plan approval by Soil Conservation District.
Inspection by SHA.

DISTRICT 7

Carroll (CL) County
Site plan approved by County Planning Commission.
Sediment control plan approval by Soil Conservation District.
County Grading Permit.
Inspection by County.

Frederick (FR) County
Site plan approved by Soil Conservation District.
County Grading Permit.
Inspection by SHA.

Howard (HO) County
Site Plan approved by Soil Conservation District.
County Grading Permit.
Inspection by County.

BALTIMORE CITY (BC)

Site plan approved Baltimore City Department of Public Works (BCDPW).
Inspection by BCDPW.

STATE AND FEDERAL PROPERTY

Borrow pits located on state and federal property are subject to Maryland Department of the Environment approval.
Inspection by SHA.

CATEGORY 300
DRAINAGE

SECTION 308 – EROSION AND SEDIMENT CONTROL

SEQUENCE OF CONSTRUCTION

1. Notify the MDE Inspector within seven (7) working days by writing and/or by telephone at (410) 537-3510 to arrange for a pre-construction meeting prior to beginning construction.

2. Erosion and Sediment Control devices and/or measures are to be installed prior to any excavation or disturbance within the project limits.

3. All grading activities shall occur only during dry weather unless erosion and sediment controls are in place.

4. Install traffic barrier and traffic barrier end treatments.

5. No disturbed area shall be left unstabilized overnight unless the runoff is directed to an approved sediment control device.

6. Erosion and Sediment Control devices and/or measures are to remain in place until their removal is approved by the MDE Inspector.

CATEGORY 300
DRAINAGE

SECTION 308 — EROSION AND SEDIMENT CONTROL

308.01 DESCRIPTION.

253 **ADD:** The following after the third paragraph.

General Notes.

(a) MDE Notification. If an Erosion and Sediment Control Permit is issued for this project, notify the Administration and MDE in writing or by telephone (410) 537-3510 at the following points:

(1) Pre-construction meeting.

(2) Erosion and sediment control meeting (minimum 7 working days prior to commencing earth disturbing activities).

(3) Following installation of initial sediment control measures.

(4) During installation of major sediment control basins/traps.

(5) Prior to removal or modification of any sediment control structures.

(6) Prior to removal of all sediment control devices.

(7) Prior to final acceptance by the Administration.

(b) Ingress/Egress Controls. Protect all points of construction ingress and egress to prevent the deposition of materials on public roads. Immediately remove all materials deposited on public roads. The flushing of road surfaces is prohibited.

Control all ingress and egress points through the use of a stabilized construction entrance conforming to 308.03.30.

(c) Inspection. Inspect all erosion and sediment control measures daily and maintain continuously in an effective operating condition.

(d) Shutdowns and/or Penalties. Total compliance with the approved erosion and sediment control plan is expected at all times. In cases where the Contractor is found to be in non-compliance, the Administration may take steps to impose selected or total shutdowns and impose per day penalties for non-compliance.

The Administration may impose a total or partial shutdown if the project may adversely impact the waters of the State.

(e) Record Keeping. Make the project's approval letter, approved erosion and sediment control plans, approved change requests, daily log books and test reports available on-site for inspection by duly authorized officials of MDE.

(f) Erosion and Sediment Control Excavation. Place silt removed from control devices in an approved waste site either on or off the project. Material stored on-site may be reused once it is dried and if it conforms to the Administration's requirements for embankment or any unspecified need.

(g) Off-Site Utility Work. Follow these additional best management practices for sediment control for utility construction in areas outside of designed controls:

(1) Call "Miss Utility" at 1-800-257-7777 48 hours prior to the start of work.

(2) Place excavated material on the high side of the trench.

(3) Backfill, compact and stabilize trenches for utility installations at the end of each working day. When this is not possible, follow (4).

(4) Place temporary silt fences immediately downstream of any disturbed area intended to remain disturbed for more than one day.

(h) Sensitive Areas. No construction activities are allowed within specified sensitive areas of the project without prior notification of the Engineer. Designate a responsible party to monitor all work in these areas to assure that reasonable care is taken in or adjacent to these areas. Areas considered sensitive are defined as: floodplains, wetlands (tidal, nontidal and associated buffers) critical areas, forested areas, archeological sites, historic sites, parkland, and open water.

(i) Standard Stabilization Note. Following initial soil disturbance or redisturbance, complete permanent or temporary stabilization within seven (7) calendar days as to the surface of all perimeter controls, dikes, swales, ditches, perimeter slopes, and all slopes greater than 3 horizontal to 1 vertical (3:1); and fourteen days (14) as to all other disturbed or graded areas on the project site.

(j) Site Information (Not for Bidding Purposes).

(1) Total area of site	163	acres
(2) Area disturbed	163	acres
(3) Area to be roofed or paved	0	acres
(4) Total cut	0	cubic yards
(5) Total fill	0	cubic yards
(6) Off-site waste/borrow area location (if known)	N/A	

(k) Incremental Stabilization. Refer to the current Maryland Standards and Specifications for Soil Erosion and Sediment Control for the incremental stabilization of cuts and fills.

(l) Disturbed Areas. Place excavated trench material for any storm drain pipe and underdrain pipe installation on the high side of the trench. Backfill, compact, and stabilize trenches for any storm drain pipe and underdrain pipe installations at the end of each working day.

Stabilize all other disturbed areas at the end of the working day. Place silt fence downgrade of any areas that cannot be stabilized at the end of the work day such that all runoff from the disturbed area will be filtered.

(m) Removal of Controls. Establish permanent stabilization for all contributory disturbed areas and obtain permission from MDE and the Administration prior to prior to the removal of sediment control measures.

Immediately stabilize any areas disturbed by the removal of sediment control measures.

(n) Notice of Enforcement. Sediment and erosion control regulations will be strictly enforced.

308.05 DESIGN CERTIFICATION

Insert: The following:

ENVIRONMENTAL INFORMATION

***MDE #* 09-SF-0248**

CATEGORY 300
DRAINAGE

SECTION 308 — EROSION AND SEDIMENT CONTROL

308.01 DESCRIPTION.

308.01.04 Incentive/Liquidated Damages Payments.

Delete: The entire paragraph.

INSERT: The following.

The total incentive awarded for this Contract will not exceed $0. The rating quarter incentive payment for this contract is $0. A final incentive payment for this contract is $0 less the total quarterly incentives paid during a contract extension.

For each day that the project has a 'D' rating, liquidated damages will be imposed in the amount of $2,992 per day. Failure to upgrade the project to the minimum of a 'B' rating within 72 hours will result in the project being rated 'F'.

For each day that the project has an 'F' rating, liquidated damages will be imposed in the amount of $3,985 per day.

CATEGORY 600
SHOULDERS

SECTION 605 — METAL TRAFFIC BARRIERS

605.03 CONSTRUCTION.

ADD: The following at the end of the section.

605.03.09 Modify Existing Traffic Barrier. Offset blocks and W beam panels shall be installed on the rear face of the existing posts as shown on the Plans or as directed by the Engineer. The height of the rail shall be measured to ensure it conforms to the current height shown on the Standard MD 605.28-01.

605.04 MEASUREMENT AND PAYMENT.

ADD: The following at the end of the section.

605.04.12 Modify Existing Traffic Barrier will be measured and paid for at the Contract unit price per linear foot.

605.04.13 Traffic Barrier W Beam Median Barrier with Double Rail Transition will be measured and paid for at the Contract unit price per linear foot.

605.04.14 Remove and Reset Traffic Barrier End Treatment-Any Type will be measured and paid for at the Contract unit price per each.

SECTION 875 — UTILITY STATEMENT

DESCRIPTION. The Contractor's attention is called to the requirements of Sections GP-5.05, GP-7.13 and GP-7.17.

MATERIALS. Not Applicable.

CONSTRUCTION.

(a) Attention of the Contractor is directed to the possible presence of water, sewer, gas mains, electrical wires, conduit, communications cables (both overhead and underground), poles and house service connections in the street or highway in which the construction project is to be performed. The Contractor shall exercise special care and extreme caution to protect and avoid damage to utility company facilities as described in the preceding sentence. The Contractor shall take into consideration the adjustments and installations by public utilities in areas within the limits of this Contract. Existing utilities have been generally located and shown on the Plans as they are believed to exist; however, the Administration assumes no responsibility for the accuracy of these locations.

Prior to ordering any storm drain or water/sewer main materials, the Contractor shall locate and test pit any underground facilities that appear to be in conflict in order to determine if conflicts exist. In the event that conflicts may be possible, this information shall immediately be forwarded to the State's representative for review and resolution. Material ordered prior to obtaining test pit information will not be considered in any request from the Contractor for any equitable adjustments due to existing utility conflicts.

(b) The Contractor shall locate all existing utilities and be responsible for their safety. Should any existing utilities be damaged or destroyed due to the operations of the Contractor, the damaged or destroyed components shall be immediately replaced or repaired as necessary to restore the utility to a satisfactory operating condition. These repairs or replacements shall be at no additional expense to the Administration or the owner of the utility.

(c) The existing utilities requiring relocation or adjustment shall be relocated or adjusted by the agency responsible for their maintenance or by the owner of the utility **unless otherwise indicated in the Contract Documents**. The Contractor shall inform the respective utility companies at least five days prior to working in any area. In addition, the Contractor shall give sufficient notice to the specific utilities of the Contractor's overall plan for construction. The utility companies will establish the lead-time necessary to meet the applicable utility work schedule and coordinate with the Contractor's work operations based upon the Contractor's overall plan.

Any submittal by the Contractor to vary the sequence of work and/or perform concurrent work in multiple phased differing from the recommended maintenance of traffic phasing, must be accompanied by an updated schedule or CPM reflecting all utility relocation's and adjustments. The Contractor shall be responsible, upon gaining approval, for coordinating utility relocations and adjustments with the affected utility owners, SHA project engineer and the District Utility Engineer. All requirements and lead times as stated in the Utility Statement and Special Provisions will remain in effect unless written approval for the utility company and the District Utility Engineer is received by the Contractor prior to the commencing any requested work.

NOTE: It is anticipated that no Facilities are to be Relocated as Part of this Contract.

(d) The following known utility companies may have adjustments required to accommodate the proposed construction:

SHA TRAFFIC OPERATIONS DIVISION: The engineer for SHA-TOD is Mr. Edward Rodenhizer, 410-787-7653.
SHA maintains the traffic signal system within the limits of this project.
Please note: "MISS UTILITY" DOES NOT LOCATE THESE FACILITIES. You must notify Mr. Rodenhizer 48 hours (two full working days) in advance of working in the area of a signalized intersection for a traffic signal locate.

SHA DISTRICT OPERATIONS: The engineer for SHA District Utilities is Mr. Bruce Poole, 410-543-6715.
SHA maintains the roadway lighting system within the limits of this project.
Please note: "MISS UTILITY" DOES NOT LOCATE THESE FACILITIES. You must notify Mr. Poole 48 hours (two full working days) in advance of working in the area of the roadway lighting for the roadway lighting locate.

For VMS, CHART and ITS facility locations, contact Bud Malone at 410-582-5650 or 443-604-6794 at least 72 hours in advance of work. For road detector or weather station facilities, contact Harry Brokes at the state Radio Shop, 410-747-8598 at least 72 hours in advance of work.

NOTE: The Contractor shall make all adjustments to surface utility frame and covers, water valves, and water meters. The cost of these adjustments shall be incidental to the price bid for bituminous concrete surface as per Section 504.04 of the specifications or the various sidewalk driveway and curb/gutter work unless the adjustment (s) is twelve inches or more, in these cases the adjustment (s) may be paid for under pertinent line items(s). All adjustments hall be done according to the pertinent utility owners specifications. The contractor shall contact the pertinent utility owners prior to adjustment of any facility
Contractor will request utility to accept in writing all adjustments upon completion of work and arrange a field meeting between the utility, the contractor and the SHA project staff.

(e) When it is necessary to use steel plates at any point during construction, the following minimum requirements shall be met:

1) Steel plates are to be no less than 1-inch thick.
2) Steel plates are to cover access pit(s) with a 1-foot overlap onto existing pavement on all four sides of access pit(s).
3) When only three sides overlap existing roadway, the fourth side shall be supported by a 12” X 12” I beam or timber.
4) In cases where plates are used to cover extremely large excavations, it will be necessary to install an immediate support system to prevent deflection.
5) Steel plates must be pinned to prevent movement.
6) Steel plates must be ramped with cold patch or hot mix asphalt at end of each work shift.
7) It will be necessary to recess any steel plates that are placed in the roadway during the winter months.
8) In cases where two or more are placed together, they shall be welded together by placing at least three welds, 12 inches (centered on each plate) in length on each abutting plate. One weld is placed no more than one foot from each edge and one is placed in the center of the plates.

(f) All notifications to the above utility companies and "MISS UTILITY", 1-800-257-7777, shall be given 48 hours (two full working days) in advance of working in the area of the specific affected utility. The notification to "MISS UTILITY" is required whenever any excavating or similar work is to be performed. In order to locate State owned traffic signal facilities; contact Mr. Ed Rodenhizer at the Office of Traffic and Safety, 410-787-7652. For State owned street lighting, contact the local Resident Maintenance Engineer. Please allow at least 72 hours response times for State facilities.

(g) If adjustments are required to facilities, it will be necessary that the existing facilities remain in service until the new construction is complete and placed in service. The Contractor will prepare a plan to keep the facilities in service and submit copies to the State’s Project Engineer and the utility owner for review and approval at least 10 business days prior to the start of work. Also, when adjustments are required, establishment of lead times are necessary to meet the applicable utility schedule and coordination with the Contractor's work operation.

MEASUREMENT AND PAYMENT. Working around or protecting existing aerial and underground utilities, regardless of ownership (State or public); removal of temporary materials from the adjusted utilities prior to placement of the proposed hot mix asphalt; installation of temporary utility service connections; cooperation with the owners of the utilities and with other Contractors will not be measured for payment and the cost will be incidental to the items specified in the Contract Documents.

CATEGORY 900
MATERIALS

SECTION 916 — SOIL AND SOIL-AGGREGATE BORROW

916.01 Borrow Excavation.

740 **DELETE:** The third paragraph "Recycled portland ……..TC-6.10." in its entirety.

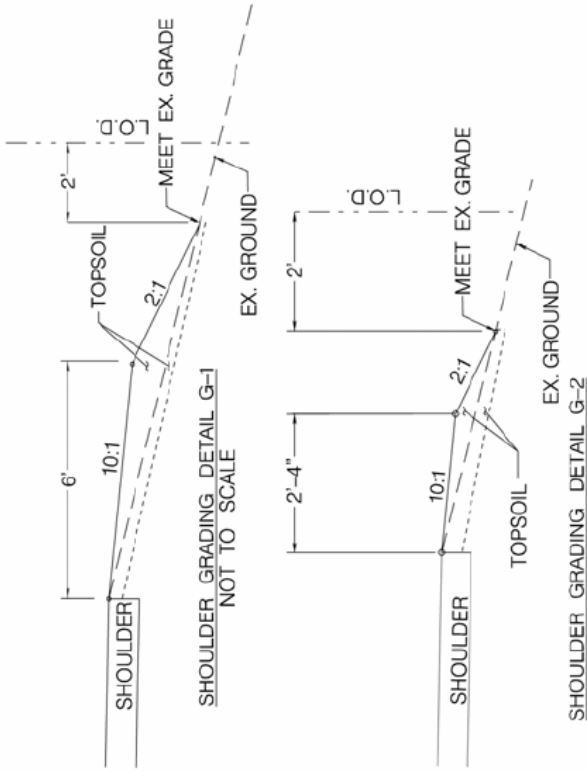

SHOULDER GRADING DETAIL G-1
NOT TO SCALE

SHOULDER GRADING DETAIL G-2
NOT TO SCALE

NOTES:
1. SHOULDER GRADING DETAIL G-1 IS TO BE USED WHEN SINGLE SIDED W BEAM BARRIER IS BEING PLACED 2' OFF SHOULDER, MEASURED FROM SHOULDER TO FACE OF W BEAM RAIL. DETAIL G-2 IS TO BE USED WHEN DOUBLE SIDED W BEAM BARRIER IS BEING PLACED 2' OFF SHOULDER.
2. TOPSOIL SHALL BE USED FOR GRADING ADJUSTMENT. PROVIDE 4 INCHES OF TOPSOIL, AND SEED AND MULCH FOR SLOPES LESS THAN 2:1 AND PROVIDE 2 INCHES OF TOPSOIL, AND SEED AND MULCH FOR SLOPES GREATER THAN 2:1.

STATE OF MARYLAND
DEPARTMENT OF TRANSPORTATION
STATE HIGHWAY ADMINISTRATION

REHABILITATION OF
W-BEAM TRAFFIC BARRIER

CONSTRUCTION DETAILS

SHOULDER GRADING DETAILS

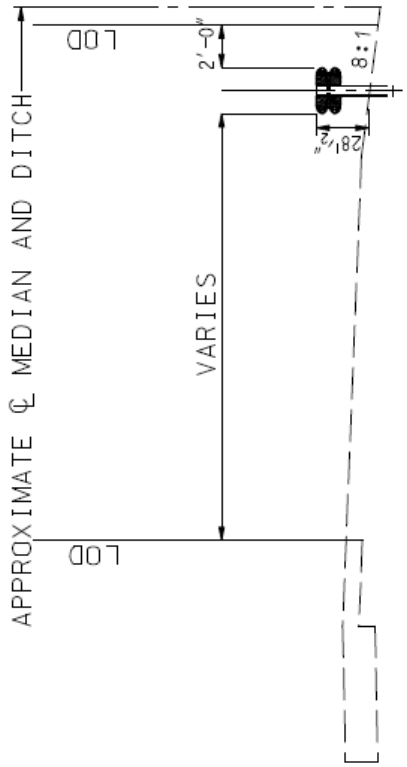

TYPICAL SECTION - MEDIAN
NOT TO SCALE

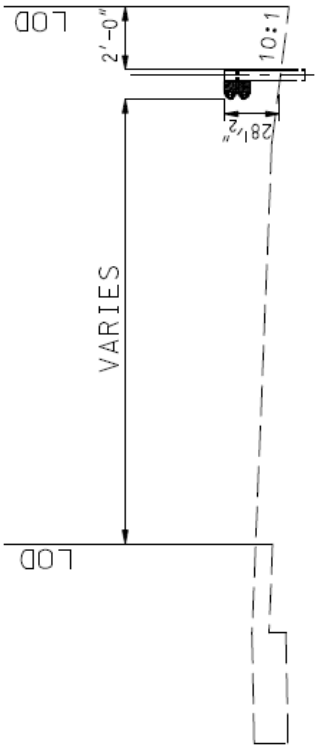

TYPICAL SECTION - OUTSIDE
NOT TO SCALE

NOTES:
1. USE 8' POSTS
2. SEE STANDARDS MD 605.21 THROUGH MD 605.25 FOR OFFSET BLOCKS, POSTS, AND RAIL PANELS.
3. TOP OF RAIL SHALL MAINTAIN A HEIGHT OF 27" RELATIVE TO THE NEAREST EDGE OF SHOULDER OR A MAXIMUM HEIGHT OF 45" ABOVE THE GROUND.

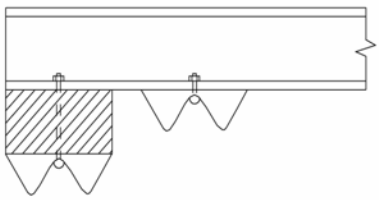

TRAFFIC BARRIER W BEAM BARRIER, MODIFIED
NOT TO SCALE

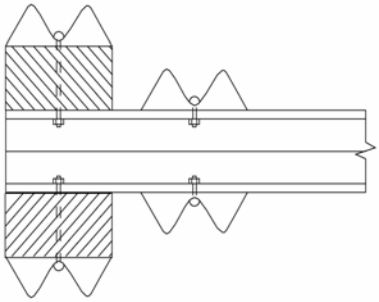

TRAFFIC BARRIER W BEAM MEDIAN BARRIER, MODIFIED
NOT TO SCALE

STATE OF MARYLAND
DEPARTMENT OF TRANSPORTATION
STATE HIGHWAY ADMINISTRATION

REHABILITATION OF
W–BEAM TRAFFIC BARRIER

CONSTRUCTION DETAILS

MODIFIED BARRIER DETAILS

DELINEATION PLACEMENT

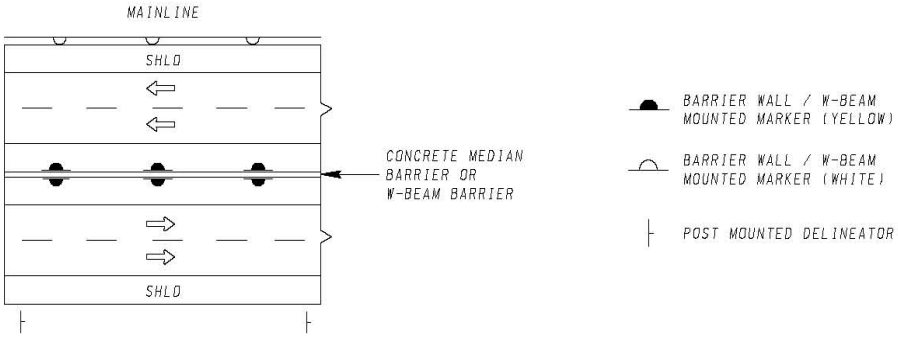

TYPICAL SPACING FOR POST MOUNTED DELINEATORS

MAINLINE - 264'
ACCEL/DECEL AND C/D/ ROADS - 100' (DOUBLE DELINEATORS) REFER TO STD. MD 665.05
RAMPS - REFER TO STD. MD 665.06

TYPICAL SPACING FOR PERMANENT BARRIER WALL MOUNTED MARKERS

(FOR ALL BARRIER WALLS WITHIN 15' OF THE TRAVEL LANE
MAINLINE - 100' **NOTE** SPACING SHOULD BE REDUCED TO 75' IN CURVES WITH A RADIUS LESS THAN 1000' AND 50' IN CURVES WITH A RADIUS LESS THAN 300'.

ACCEL/DECEL AND C/D ROADS - 100' (DOUBLE DELINEATORS) REFER TO STD. MD 665.05
RAMPS - REFER TO STD. MD 665.06

TYPICAL SPACING FOR W-BEAM MOUNTED DELINEATORS

(FOR ALL W-BEAM BARRIERS WITHIN 6' OF THE SHOULDER)
MAINLINE - 100' **NOTE** SPACING SHOULD BE REDUCED TO 50' IN CURVES WITH A RADIUS LESS THAN 1000' AND IN TANGENT SECTIONS LESS THAN 500' IN LENGTH.

ACCEL/DECEL AND C/D ROADS - 100' (DOUBLE DELINEATORS) REFER TO STD. MD 665.05
RAMPS - REFER TO STD. MD 665.06

NOTE

DELINEATORS LOCATED WITHIN 50' OF A UTILITY SHOULD BE INSTALLED AT THE UTILITY AND COMBINED WITH THE APPROPRIATE UIM(S).

SPECIFICATION 604, 605	CATEGORY CODE ITEMS	Maryland Department of Transportation STATE HIGHWAY ADMINISTRATION STANDARDS FOR HIGHWAYS AND INCIDENTAL STRUCTURES
APPROVED	Kirk G. McCallum DIRECTOR – OFFICE OF HIGHWAY DEVELOPMENT	
SHA State Highway Administration	APPROVAL • SHA REVISIONS / APPROVAL • FEDERAL HIGHWAY ADMINISTRATION	PLACEMENT OF DELINEATORS
	APPROVAL / APPROVAL 7-1-94	
	REVISED 11-08-06 / REVISED 10-25-06	
	REVISED / REVISED	STANDARD NO. MD 665.03
	REVISED / REVISED	

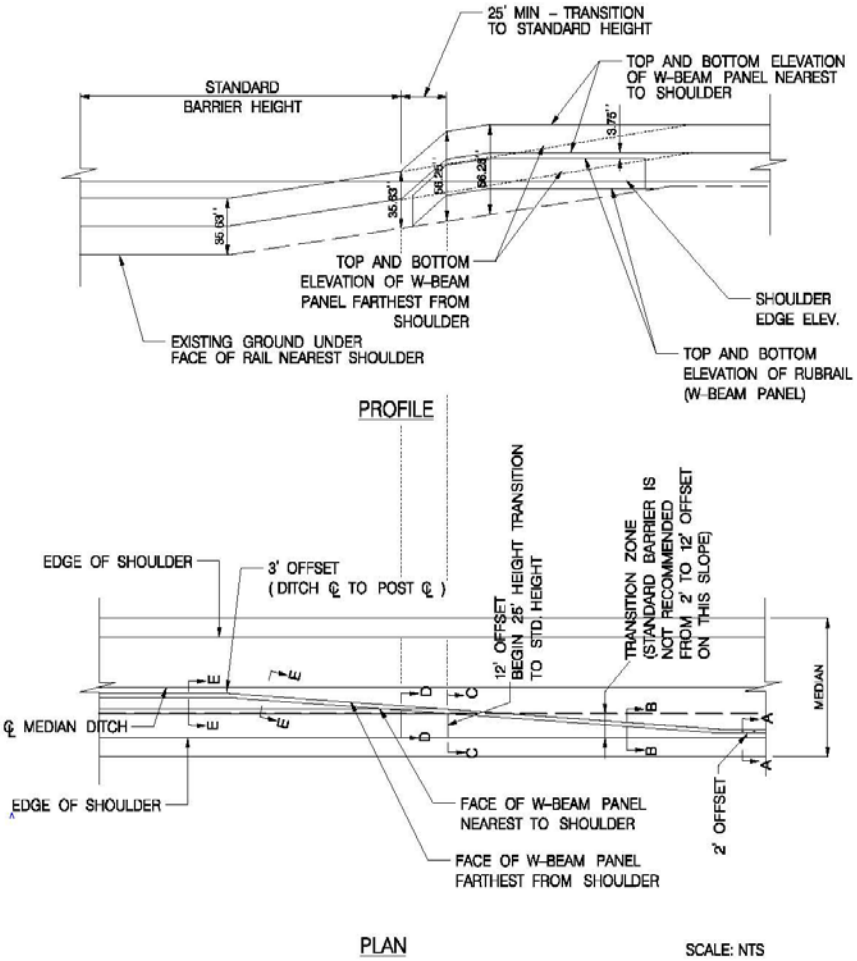

DOUBLE RAIL TRANSITION
(ACROSS SLOPES 10:1 TO 6:1)

SHEET 1 OF 3

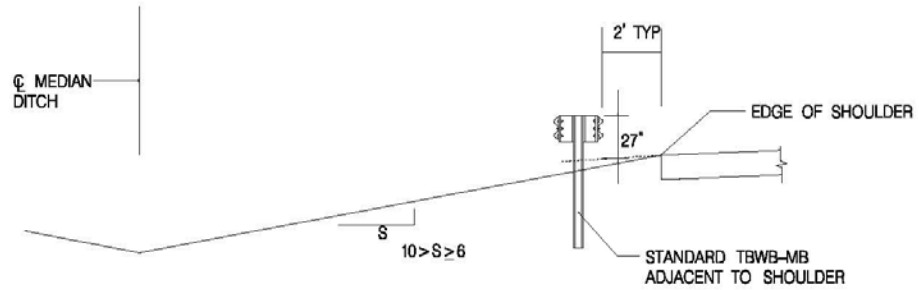

SECTION A–A

STANDARD TBWB–MB AT 2' OFFSET

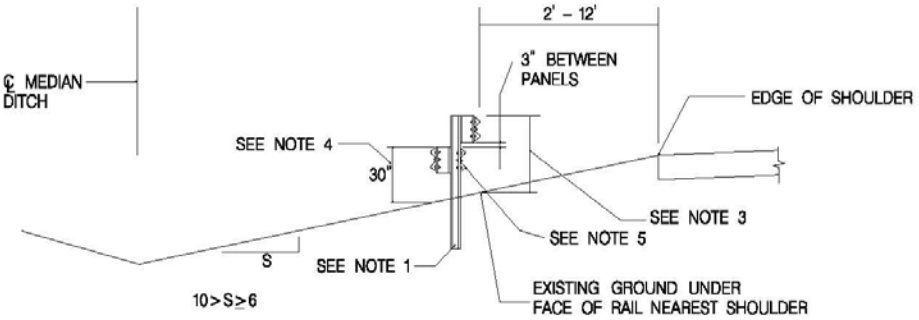

SECTION B–B

TRANSITION ZONE – 2' TO 12' OFFSET

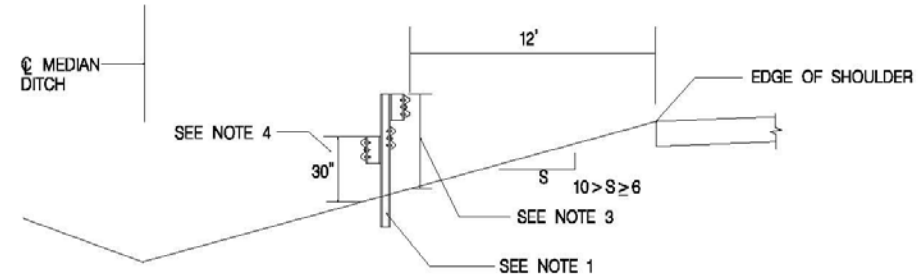

SECTION C–C

END OF TRANSITION AT 12' OFFSET

SCALE: NTS

SHEET 2 OF 3

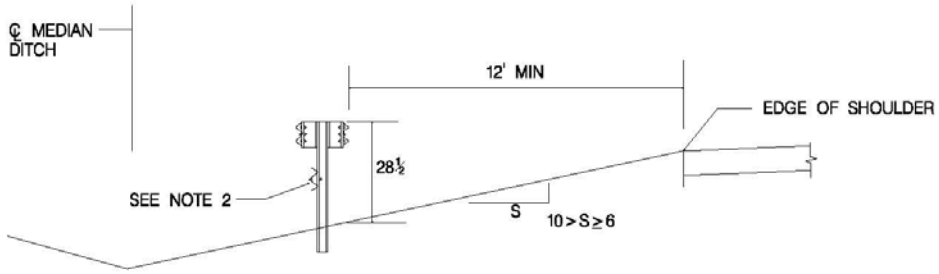

SECTION D–D

TBWB–MB AT THE END OF HEIGHT TRANSITION

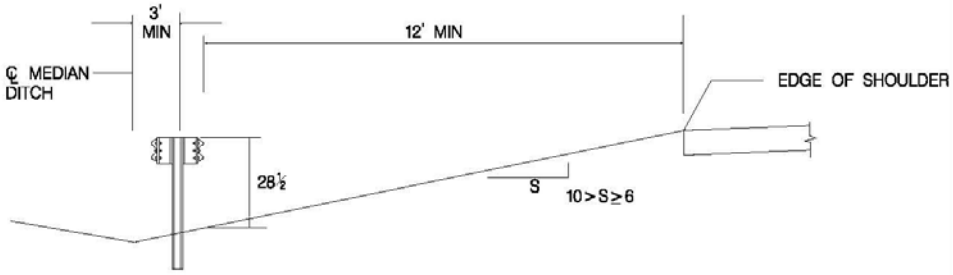

SECTION E–E

NORMAL TBWB–MB AT 12' OR GREATER OFFSET

SCALE: NTS

DOUBLE RAIL TRANSITION
(ACROSS SLOPES 10:1 TO 6:1)

NOTES:

1. USE 8' POSTS FOR THE DOUBLE RAIL TRANSITION WHEN THERE IS A BOTTOM RAIL; OFFSET BLOCKS ARE NOT REQUIRED FOR THE BOTTOM RAIL.

2. THE BOTTOM RAIL SHALL BE TUCKED BEHIND AND BOLTED TO POST AT D–D USING A 5/8" DIA. HEX. HEAD BOLT.

3. THE TOP OF RAIL SHALL MAINTAIN IT'S HEIGHT RELATIVE TO THE EDGE OF SHOULDER UNTIL A MAXIMUM HEIGHT OF 45" ABOVE THE GROUND IS ATTAINED AT FACE OF RAIL.

4. WHEN MEDIAN BARRIER IS TRANSITIONING ACROSS SLOPES THE HEIGHT OF THE RAIL FARTHEST FROM TRAFFIC WILL BE 30" ABOVE THE GROUND WHEN THERE ARE TWO RAILS ON THE FRONT; IT WILL BE THE SAME HEIGHT AS THE FRONT RAIL WHEN THERE IS ONLY A SINGLE RAIL.

5. USE RUBRAIL (W–BEAM) WHEN BOTTOM OF TOP RAIL IS MORE THAN 18" ABOVE THE GROUND AT THE FACE OF RAIL. ATTACH THE RUBRAIL TO POST 3" BELOW BOTTOM OF TOP RAIL.

6. TRANSTION HEIGHT FROM HEIGHT ABOVE GROUND AT SECTION C–C TO HEIGHT OF 28 1/2" OVER A LENGTH OF 25' MIN.

7. USE FLARE RATE BASED ON DESIGN SPEED

SHEET 3 OF 3

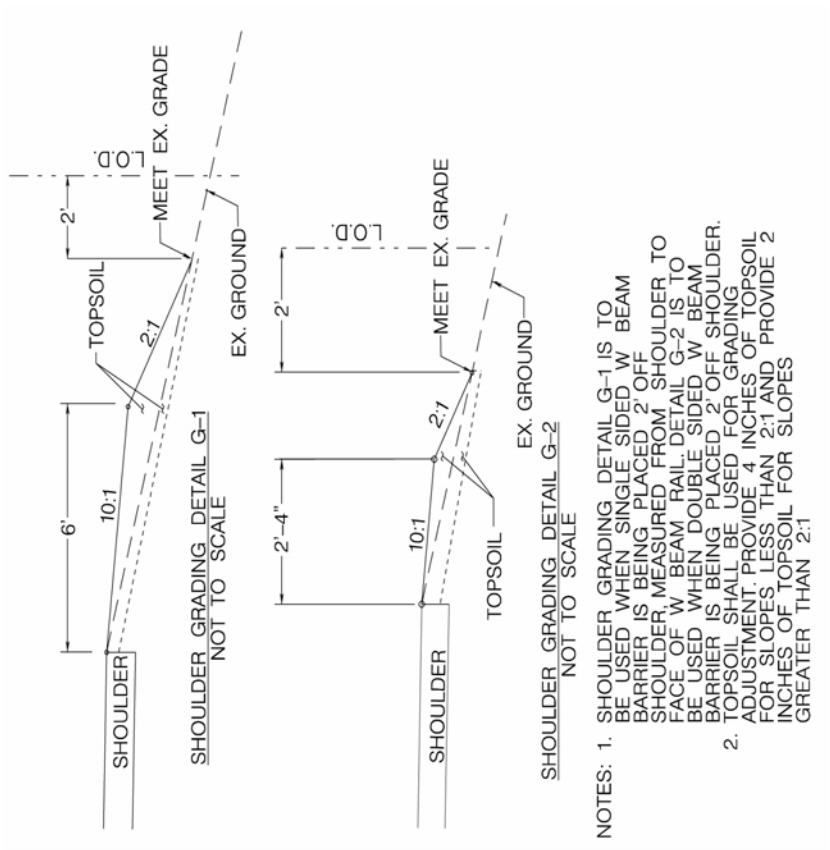

NOTES: 1. SHOULDER GRADING DETAIL G-1 IS TO BE USED WHEN SINGLE SIDED W BEAM BARRIER IS BEING PLACED. 2' OFF SHOULDER, MEASURED FROM SHOULDER TO FACE OF W BEAM RAIL. DETAIL G-2 IS TO BE USED WHEN DOUBLE SIDED W BEAM BARRIER IS BEING PLACED. 2' OFF SHOULDER.
2. TOPSOIL SHALL BE USED FOR GRADING ADJUSTMENT. PROVIDE 4 INCHES OF TOPSOIL FOR SLOPES LESS THAN 2:1 AND PROVIDE 2 INCHES OF TOPSOIL FOR SLOPES GREATER THAN 2:1

STATE OF MARYLAND
DEPARTMENT OF TRANSPORTATION
STATE HIGHWAY ADMINISTRATION

REHABILITATION OF
W-BEAM TRAFFIC BARRIER

CONSTRUCTION DETAILS

SHOULDER GRADING DETAILS

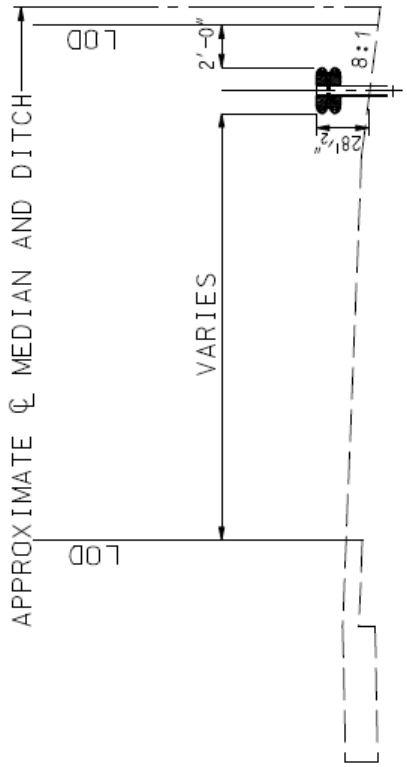

TYPICAL SECTION - MEDIAN

NOT TO SCALE

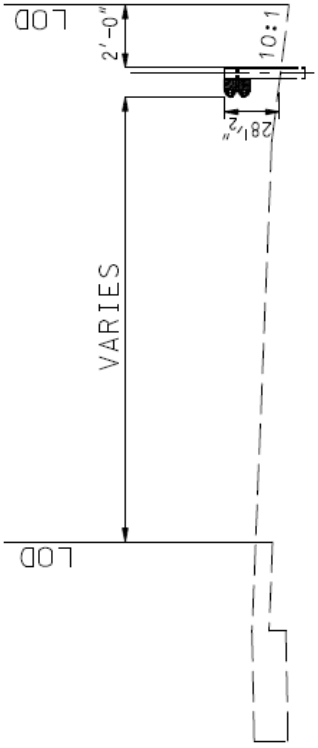

TYPICAL SECTION - OUTSIDE

NOT TO SCALE

NOTES:
1. USE 8' POSTS
2. SEE STANDARDS MD 605.21 THROUGH MD 605.25 FOR OFFSET BLOCKS, POSTS, AND RAIL PANELS.
3. TOP OF RAIL SHALL MAINTAIN A HEIGHT OF 27" RELATIVE TO THE NEAREST EDGE OF SHOULDER OR A MAXIMUM HEIGHT OF 45" ABOVE THE GROUND.

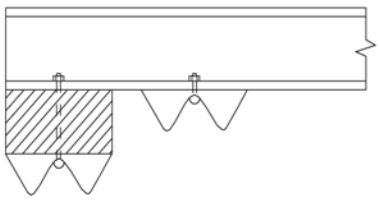

TRAFFIC BARRIER W BEAM BARRIER, MODIFIED
NOT TO SCALE

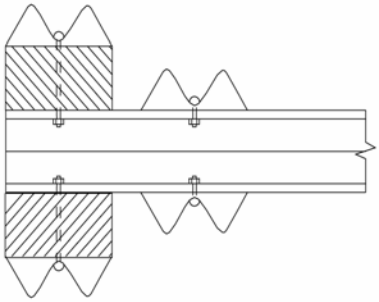

TRAFFIC BARRIER W BEAM MEDIAN BARRIER, MODIFIED
NOT TO SCALE

STATE OF MARYLAND
DEPARTMENT OF TRANSPORTATION
STATE HIGHWAY ADMINISTRATION

REHABILITATION OF
W–BEAM TRAFFIC BARRIER

CONSTRUCTION DETAILS

MODIFIED BARRIER DETAILS

DELINEATION PLACEMENT

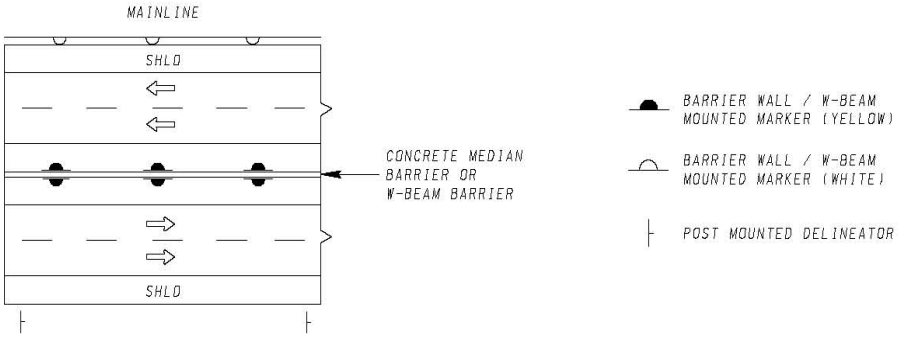

TYPICAL SPACING FOR POST MOUNTED DELINEATORS

MAINLINE - 264'
ACCEL/DECEL AND C/D/ ROADS - 100' (DOUBLE DELINEATORS) REFER TO STD. MD 665.05
RAMPS - REFER TO STD. MD 665.06

TYPICAL SPACING FOR PERMANENT BARRIER WALL MOUNTED MARKERS

(FOR ALL BARRIER WALLS WITHIN 15' OF THE TRAVEL LANE
MAINLINE - 100' **NOTE** SPACING SHOULD BE REDUCED TO 75' IN CURVES WITH A RADIUS LESS THAN 1000' AND 50' IN CURVES WITH A RADIUS LESS THAN 300'.

ACCEL/DECEL AND C/D ROADS - 100' (DOUBLE DELINEATORS) REFER TO STD. MD 665.05
RAMPS - REFER TO STD. MD 665.06

TYPICAL SPACING FOR W-BEAM MOUNTED DELINEATORS

(FOR ALL W-BEAM BARRIERS WITHIN 6' OF THE SHOULDER)
MAINLINE - 100' **NOTE** SPACING SHOULD BE REDUCED TO 50' IN CURVES WITH A RADIUS LESS THAN 1000' AND IN TANGENT SECTIONS LESS THAN 500' IN LENGTH.

ACCEL/DECEL AND C/D ROADS - 100' (DOUBLE DELINEATORS) REFER TO STD. MD 665.05
RAMPS - REFER TO STD. MD 665.06

NOTE

DELINEATORS LOCATED WITHIN 50' OF A UTILITY SHOULD BE INSTALLED AT THE UTILITY AND COMBINED WITH THE APPROPRIATE UIM(S).

SPECIFICATION 604, 605	CATEGORY CODE ITEMS	Maryland Department of Transportation STATE HIGHWAY ADMINISTRATION STANDARDS FOR HIGHWAYS AND INCIDENTAL STRUCTURES
APPROVED	Kirk G. McCallum DIRECTOR – OFFICE OF HIGHWAY DEVELOPMENT	
SHA State Highway Administration	APPROVAL • SHA REVISIONS / APPROVAL • FEDERAL HIGHWAY ADMINISTRATION	PLACEMENT OF DELINEATORS
	APPROVAL / APPROVAL 7-1-94	
	REVISED 11-08-06 / REVISED 10-25-06	STANDARD NO. MD 665.03
	REVISED / REVISED	
	REVISED / REVISED	

STATE OF MARYLAND
DEPARTMENT OF TRANSPORTATION
STATE HIGHWAY ADMINISTRATION
PROPOSAL FORM

Proposal by _____
Name

_____
Address (Street and/or P.O. Box)

_____
City State Zip

( ) ( )
A.C. Phone No. A.C. Fax No.

to furnish and deliver all materials and to do and perform all work, in conformance with the Standard Specifications, revisions thereto, General Provisions and the Special Provisions in this contract to **Upgrade Existing Traffic Barrier Upgrade** located in, **District 1 Area Wide** , Maryland, for which Invitation for Bids will be received until 12:00 o'clock noon on **Thursday, April 09, 2009,** this work being situated as follows: **Upgrade Existing Traffic Barrier and Install New Median Barrier**

To the State Highway Administration
BID BOX
7450 Traffic Drive
Hanover, Maryland 21076

In response to the advertisement by the Administration, inviting bids for the work in conformance with the Contract Documents, now on file in the office of the Administration. I/We hereby certify that I/we am/are the only person, or persons, interested in this bid proposal as principals, and that an examination has been made of the work site, the Specifications, the Plans, and Invitation for Bids, including the Special Provisions contained herein. I/We propose to furnish all necessary machinery, equipment, tools, labor and other means of construction, and to furnish all materials required to complete the project at the following unit price or lump sum price.

ITEM NO. CCS NO.	APPROXIMATE QUANTITIES	DESCRIPTION OF ITEMS	SECTION	UNIT PRICE DOLLARS	UNIT PRICE CENTS	AMOUNTS DOLLARS	AMOUNTS CENTS
1001 110350	LUMP SUM	TYPE B ENGINEERS OFFICE	103	LUMP SUM			
1002 120500	LUMP SUM	MAINTENANCE OF TRAFFIC	104	LUMP SUM			
1003 120610	107	PER UNIT DAY ARROW PANEL	104.07				
1004 120625	300	SQUARE FEET OF TEMPORARY TRAFFIC SIGNS HIGH PERFORMANCE WIDE ANGLE RETROREFLECTIVE SHEETING	104.08				
1005 120820	150	EACH OF DRUMS FOR MAINTENANCE OF TRAFFIC	104.12				
1006 120890	107	PER UNIT DAY PROTECTION VEHICLE	104.23				

ITEM NO. CCS NO.	APPROXIMATE QUANTITIES	DESCRIPTION OF ITEMS	SECTION	UNIT PRICE DOLLARS	UNIT PRICE CENTS	AMOUNTS DOLLARS	AMOUNTS CENTS
1007 130840	LUMP SUM	CONSTRUCTION STAKEOUT	107	LUMP SUM			
1008 130850	LUMP SUM	MOBILIZATION	108	LUMP SUM			

END OF CATEGORY NO. 1

STATE CONTRACT - AX6895168
FEDERAL CONTRACT - ES-000A(428)E

ITEM NO. CCS NO.	APPROXIMATE QUANTITIES	DESCRIPTION OF ITEMS	SECTION	UNIT PRICE DOLLARS	UNIT PRICE CENTS	AMOUNTS DOLLARS	AMOUNTS CENTS
2001 203030	40	CUBIC YARDS OF TEST PIT EXCAVATION	205				

END OF CATEGORY NO. 2

STATE CONTRACT - AX6895168
FEDERAL CONTRACT - ES-000A(428)E

ITEM NO. CCS NO.	APPROXIMATE QUANTITIES	DESCRIPTION OF ITEMS	SECTION	UNIT PRICE DOLLARS	UNIT PRICE CENTS	AMOUNTS DOLLARS	AMOUNTS CENTS
6001 600000	700	LINEAR FEET OF MODIFY EXISTING TRAFFIC BARRIER	XXX				
6002 600000	5,000	LINEAR FEET OF TRAFFIC BARRIER W BEAM MEDIAN BARRIER WITH DOUBLE RAIL TRANSITION	XXX				
6003 660482	10,000	LINEAR FEET OF TRAFFIC BARRIER W BEAM USING 6 FOOT POST	605				
6004 660483	25	EACH OF TRAFFIC BARRIER W BEAM 6 FOOT POST	605				
6005 660650	500	LINEAR FEET OF TRAFFIC BARRIER W BEAM USING 8 FOOT POST	605				
6006 660651	10	EACH OF TRAFFIC BARRIER W BEAM 8 FOOT POST	605				

ITEM NO. CCS NO.	APPROXIMATE QUANTITIES	DESCRIPTION OF ITEMS	SECTION	UNIT PRICE DOLLARS	UNIT PRICE CENTS	AMOUNTS DOLLARS	AMOUNTS CENTS
6007 660782	42,240	LINEAR FEET OF TRAFFIC BARRIER W BEAM MEDIAN BARRIER	605				
6008 660786	4,224	LINEAR FEET OF TRAFFIC BARRIER W BEAM MEDIAN BARRIER WITH BOTTOM PANEL	605				
6009 661380	2	EACH OF TRAFFIC BARRIER W BEAM ANCHORAGE AT STRUCTURE	605				
6010 661500	5	EACH OF END ANCHORAGE TERMINAL FOR TYPE A END TREATMENT EITHER OPTION	606				
6011 661505	1	EACH OF TYPE B TRAFFIC BARRIER END TREATMENT	606				
6012 661510	7	EACH OF TYPE C TRAFFIC BARRIER END TREATMENT	606				

ITEM NO. CCS NO.	APPROXIMATE QUANTITIES	DESCRIPTION OF ITEMS	SECTION	UNIT PRICE DOLLARS	UNIT PRICE CENTS	AMOUNTS DOLLARS	AMOUNTS CENTS
6013 661525	45	EACH OF TYPE F TRAFFIC BARRIER END TREATMENT	606				
6014 661540	7	EACH OF TYPE K TRAFFIC BARRIER END TREATMENT, ANY OPTION	606				
6015 661550	200	CUBIC YARDS OF SHOULDER GRADING ADJUSTMENT FOR TRAFFIC BARRIER END TREATMENT	606				
6016 661565	8	EACH OF REMOVE AND RESET TRAFFIC BARRIER END TREATMENT-ANY TYPE	XXX				
6017 662182	700	LINEAR FEET OF REMOVE AND RESET EXISTING TRAFFIC BARRIER W BEAM	605				
6018 662325	2,000	LINEAR FEET OF REMOVAL AND DISPOSAL OF EXISTING TRAFFIC BARRIER W BEAM	605				

ITEM NO. CCS NO.	APPROXIMATE QUANTITIES	DESCRIPTION OF ITEMS	SECTION	UNIT PRICE DOLLARS	UNIT PRICE CENTS	AMOUNTS DOLLARS	AMOUNTS CENTS
6019 662327	700	LINEAR FEET OF REMOVE AND RESET EXISTING MEDIAN TRAFFIC BARRIER W BEAM	605				
6020 670205	500	EACH OF RAIL RIDERS TRAFFIC BARRIER W BEAM REFLECTIVE DELINEATORS	XXX				

END OF CATEGORY NO. 6

STATE CONTRACT - AX6895168
FEDERAL CONTRACT - ES-000A(428)E

ITEM NO. CCS NO.	APPROXIMATE QUANTITIES	DESCRIPTION OF ITEMS	SECTION	UNIT PRICE DOLLARS	UNIT PRICE CENTS	AMOUNTS DOLLARS	AMOUNTS CENTS
8001 813023	250	SQUARE FEET OF RELOCATE EXISTING GROUND MOUNTED SIGNS	822				

END OF CATEGORY NO. 8

STATE CONTRACT - AX6895168
FEDERAL CONTRACT - ES-000A(428)E

ITEM NO. CCS NO.	APPROXIMATE QUANTITIES	DESCRIPTION OF ITEMS SECTION	UNIT PRICE DOLLARS	UNIT PRICE CENTS	AMOUNTS DOLLARS	AMOUNTS CENTS
		AGGREGATE AMOUNT AT UNIT PRICES ALTERNATE A IS USING BID 1001-1008, 2001, 6001-6020, 8001				
		THIS PROPOSAL SHALL BE FILLED IN BY THE BIDDER WITH PRICES IN NUMERALS AND EXTENSIONS SHALL BE MADE BY HIM.				

STATE CONTRACT - AX6895168
FEDERAL CONTRACT - ES-000A(428)E

GENERAL MATERIAL REQUIREMENTS

CONVICT PRODUCED MATERIALS

Section 1019 of the Intermodal Surface Transportation Efficiency Act of 1991 (ISTEA) clarifies that materials produced by convict labor after July 1, 1991 may not be used for Federal-aid highway construction projects unless produced at a prison facility producing convict made materials for Federal-aid construction projects prior to July 1, 1987.

CONTRACT PROVISION BUY AMERICA

The Contractor shall comply with Section 165 of the Surface Transportation Assistance Act of 1982 as amended by Section 1041(a) and 1048(a) of the Intermodal Surface Transportation Efficiency Act of 1991 with regard to the furnishing and coating of iron and steel products. A nationwide waiver for this provision has been granted for pig iron and processed, pelletized, and reduced iron ore.

All bidders shall submit a bid using Domestic Iron and Steel Products with coatings that have been applied inside the United States. If the bidder elects, an additional alternate bid may be submitted using Foreign Products on one or more of the above items in this Contract.

The Contract, if awarded, will be awarded to the responsible bidder who submits the lowest total bid for the Contract based on furnishing Domestic Products unless such bid exceeds the lowest total bid based on furnishing Foreign Products by more than twenty five percent (25%). Foreign Products will not be permitted to be used as a substitution for Domestic ones after the bid has been awarded.

When steel and iron products and/or coatings are used in a project, the Contractor is not prohibited from using a minimal amount of foreign steel and iron products and/or coatings, if the cost of such materials used does not exceed one-tenth of one percent (0.1 %) of the total contract cost or $2,500, whichever is greater.

ALTERNATE BID
USING FOREIGN PRODUCTS

When a bidder elects to utilize Foreign Products on one or more items, the following summation indicating the Total Bid using Foreign Products must be completed in addition to the individual item bid tabulations.

The following instructions are given to the bidder in completing the Total Bid summation using Foreign Products:

1 - The "Bid Total" for the initial bid using Domestic Products shall be shown on line (1).

2 - The subtotal for Item Amounts using Domestic Products shall be shown on line (2), for those items which the Contractor elects to use Foreign Products.

3 - The subtotal for Item Amounts using Foreign Products shall be shown on line (3).

4 - The total Bid, utilizing Foreign Products shall be shown on line (4). The value is obtained by subtracting subtotal (2) from the Total Bid (1) and then adding subtotal (3).

Bid Total for Bid 1 using Domestic items	Line (1)_____
Total of Domestic Items	Line (2) -_____
Total of Foreign Items	Line (3) +_____
Bid Total using Foreign Items	Line (4)_____

ALTERNATE BID - USING FOREIGN PRODUCTS
BIDDER'S INSTRUCTIONS

When the bidder elects to submit a bid for one or more items using Foreign Products, the following form must be used. For each item that Foreign Products are contemplated, the appropriate "Item Numbers", "Approximate Quantities", "Description of Items", "Unit Price or Lump Sum Price", "Item Amount Domestic" and "Item Amount Foreign" shall be tabulated below as specified in the initial bid. The bidder shall indicate the unit price in dollars and cents and show the total cost of the item for each item that utilizes Foreign Products. When all items utilizing Foreign Products have been listed, the bidder shall indicate on Page 4 of 20 the subtotals of the Item Amounts for Domestic Products in Line (2) and for Foreign Products in Line (3).

Item Nos.	Approximate Quantities	Description of Items	Unit Price or Lump Sum Dollars.Cts.	Items Amount Domestic Dollars.Cts.	Items Amount Foreign Dollars.Cts.

BID/PROPOSAL AFFIDAVIT

A. AUTHORIZED REPRESENTATIVE AND AFFIANT

I HEREBY AFFIRM THAT:

I am the (title) _____ and the duly authorized representative of (business) _____ and that I possess the legal authority to make this Affidavit on behalf of myself and the business for which I am acting.

B. CERTIFICATION REGARDING COMMERCIAL NONDISCRIMINATION

The undersigned bidder or offeror hereby certifies and agrees that the following information is correct:

In preparing its bid on this project, the bidder or offeror has considered all proposals submitted from qualified, potential subcontractors and suppliers, and has not engaged in "discrimination" as defined in §19-103 of the State Finance and Procurement Article of the Annotated Code of Maryland. "Discrimination" means any disadvantage, difference, distinction, or preference in the solicitation, selection, hiring, or commercial treatment of a vendor, subcontractor, or commercial customer on the basis of race, color, religion, ancestry, or national origin, sex, age, marital status, sexual orientation, or on the basis of disability or any otherwise unlawful use of characteristics regarding the vendors, supplier's or commercial customer's employees or owners. "Discrimination" also includes retaliating against any person or other entity for reporting any incident of "discrimination". Without limiting any other provision of the solicitation on this project, it is understood that, if the certification is false, such false certification constitutes grounds for the State to reject the bid submitted by the bidder or offeror on this project, and terminate any contract awarded based on the bid. As part of its bid or proposal, the bidder or offeror herewith submits a list of all instances within the past 4 years where there has been a final adjudicated determination in a legal or administrative proceeding in the state of Maryland that the bidder or offeror discriminated against subcontractors, vendors, suppliers, or commercial customers, and a description of the status or resolution of that determination, including any remedial action taken. Bidder or Offeror agrees to comply in all respects with the State's Commercial Nondiscrimination Policy as described under Title 19 of the State Finance and Procurement Article of the Annotated Code of Maryland.

C. AFFIRMATION REGARDING BRIBERY CONVICTIONS

I FURTHER AFFIRM THAT:

Neither I, nor to the best of my knowledge, information, and belief, the above business (as is defined in Section 16-101(b) of the State Finance and Procurement Article of the Annotated Code of Maryland), or any of its officers, directors, partners, controlling stockholders, or any of its employees directly involved in the business's contracting activities has been convicted of, or has had probation before judgment imposed pursuant to Criminal Procedure Article, §6-220, Annotated Code of Maryland, or has pleaded nolo contendere to a charge of, bribery, attempted bribery, or conspiracy to bribe in violation of Maryland law, or of the law of any other state or federal law, except as follows (indicate the reasons why the affirmation cannot be given and list any conviction, plea, or imposition of probation before judgment with the date, court, official or administrative body, the sentence or disposition, the name(s) of person(s) involved, and their current positions and responsibilities with the business):

_____
_____
_____.

D. AFFIRMATION REGARDING OTHER CONVICTIONS

I FURTHER AFFIRM THAT:

Neither I, nor to the best of my knowledge, information, and belief, the above business, or any of its officers, directors, partners, controlling stockholders, or any of its employees directly involved in the business's contracting activities including obtaining or performing contracts with public bodies, has:

1. Been convicted under state or federal statute of:
   (a) a criminal offense incident to obtaining, attempting to obtain, or performing a public or private contract; or

   (b) fraud, embezzlement, theft, forgery, falsification or destruction of records, or receiving stolen property;

2. Been convicted of any criminal violation of a state or federal antitrust statute;

3. Been convicted under the provisions of Title 18 of the United States Code for violation of the Racketeer Influenced and Corrupt Organization Act, 18 U.S.C. §1961, et seq., or the Mail Fraud Act, 18 U.S.C. §1341, et seq., for acts in connection with the submission of bids or proposals for a public or private contract;

4. Been convicted of a violation of the State Minority Business Enterprise Law, Section 14-308 of the State Finance and Procurement Article of the Annotated Code of Maryland;

5. Been convicted of a violation of the Section 11-205.1 of the State Finance and Procurement Article of the Annotated Code of Maryland;

6. Been convicted of conspiracy to commit any act or omission that would constitute grounds for conviction or liability under any law or statute described in subsection (1) through (5) above;

7. Been found civilly liable under a state or federal antitrust statute for acts or omissions in connection with the submission of bids or proposals for a public or private contract;

8. Been found in a final adjudicated decision to have violated the Commercial Nondiscrimination Policy under Title 19 of the State Finance and Procurement Article of the Annotated Code of Maryland with regard to a public or private contract; or

9. Admitted in writing or under oath, during the course of an official investigation or other proceedings, acts or omissions that would constitute grounds for conviction or liability under any law or statute described in Section B and subsections (1) through (7) above, except as follows (indicate reasons why the affirmations cannot be given, and list any conviction, plea, or imposition of probation before judgment with the date, court, official or administrative body, the sentence or disposition, the name(s) of the person(s) involved and their current positions and responsibilities with the business, and the status of any debarment):
_____
_____
_____.

E. AFFIRMATION REGARDING DEBARMENT

I FURTHER AFFIRM THAT:

Neither I, nor to the best of my knowledge, information, and belief, the above business, or any of its officers, directors, partners, controlling stockholders, or any of its employees directly involved in the business's contracting activities, has ever been suspended or debarred (including being issued a limited denial of participation) by any public entity, except as follows (list each debarment or suspension providing the dates of the suspension or debarment, the name of the public entity and the status of the proceedings, the name(s) of the person(s) involved and their current positions and responsibilities with the business, the grounds of the debarment or suspension, and the details of each person's involvement in any activity that formed the grounds of the debarment or suspension): _____

F. AFFIRMATION REGARDING DEBARMENT OF RELATED ENTITIES

I FURTHER AFFIRM THAT:

1. The business was not established and it does not operate in a manner designed to evade the application of or defeat the purpose of debarment pursuant to Sections 16-101, et seq., of the State Finance and Procurement Article of the Annotated Code of Maryland; and

2. The business is not a successor, assignee, subsidiary, or affiliate of a suspended or debarred business, except as follows (you must indicate the reasons why the affirmations cannot be given without qualification):

_____
_____
_____

G. SUB-CONTRACT AFFIRMATION

I FURTHER AFFIRM THAT:

Neither I, nor to the best of my knowledge, information, and belief, the above business, has knowingly entered into a contract with a public body under which a person debarred or suspended under Title 16 of the State Finance and Procurement Article of the Annotated Code of Maryland will provide, directly or indirectly, supplies, services, architectural services, construction related services, leases of real property, or construction.

H. AFFIRMATION REGARDING COLLUSION

I FURTHER AFFIRM THAT:

Neither I, nor to the best of my knowledge, information, and belief, the above business has:

1. Agreed, conspired, connived, or colluded to produce a deceptive show of competition in the compilation of the accompanying bid or offer that is being submitted;

2. In any manner, directly or indirectly, entered into any agreement of any kind to fix the bid price or price proposal of the bidder or Offeror or of any competitor, or otherwise taken any action in restraint of free competitive bidding in connection with the contract for which the accompanying bid or offer is submitted.

I. FINANCIAL DISCLOSURE AFFIRMATION

I FURTHER AFFIRM THAT:

I am aware of, and the above business will comply with, the provisions of Section 13-221 of the State Finance and Procurement Article of the Annotated Code of Maryland, which require that every business that enters into contracts, leases, or other agreements with the State of Maryland or its agencies during a calendar year under which the business is to receive in the aggregate $100,000 or more shall, within 30 days of the time when the aggregate value of the contracts, leases, or other agreements reaches $100,000, file with the Secretary of State of Maryland certain specified information to include disclosure of beneficial ownership of the business.

J. POLITICAL CONTRIBUTION DISCLOSURE AFFIRMATION

I FURTHER AFFIRM THAT:

I am aware of, and the above business will comply with, Election Law Article, §§14-101—14-108, Annotated Code of Maryland, which requires that every person that enters into contracts, leases, or other agreements with the State of Maryland, including its agencies or a political subdivision of the State, during a calendar year in which the person receives in the aggregate $100,000 or more shall file with the State Board of Elections a statement disclosing contributions in excess of $500 made during the reporting period to a candidate for elective office in any primary or general election.

K. DRUG AND ALCOHOL FREE WORKPLACE

(Applicable to all contracts unless the contract is for a law enforcement agency and the agency head or the agency head's designee has determined that application of COMAR 21.11.08 and this certification would be inappropriate in connection with the law enforcement agency's undercover operations.)

I CERTIFY THAT:

1. Terms defined in COMAR 21.11.08 shall have the same meanings when used in this certification.

2. By submission of its bid or offer, the business, if other than an individual, certifies and agrees that, with respect to its employees to be employed under a contract resulting from this solicitation, the business shall:

(a) Maintain a workplace free of drug and alcohol abuse during the term of the contract;

(b)Publish a statement notifying its employees that the unlawful manufacture, distribution, dispensing, possession, or use of drugs, and the abuse of drugs or alcohol is prohibited in the business' workplace and specifying the actions that will be taken against employees for violation of these prohibitions;

(c) Prohibit its employees from working under the influence of drugs or alcohol;

(d) Not hire or assign to work on the contract anyone whom the business knows, or in the exercise of due diligence should know, currently abuses drugs or alcohol and is not actively engaged in a bona fide drug or alcohol abuse assistance or rehabilitation program;

(e) Promptly inform the appropriate law enforcement agency of every drug-related crime that occurs in its workplace if the business has observed the violation or otherwise has reliable information that a violation has occurred;

(f) Establish drug and alcohol abuse awareness programs to inform its employees about:

(i) The dangers of drug and alcohol abuse in the workplace;
(ii) The business' policy of maintaining a drug and alcohol free workplace;
(iii) Any available drug and alcohol counseling, rehabilitation, and employee assistance programs; and
(iv) The penalties that may be imposed upon employees who abuse drugs and alcohol in the workplace;

(g) Provide all employees engaged in the performance of the contract with a copy of the statement required by §J(2)(b), above;

(h) Notify its employees in the statement required by §J(2)(b), above, that as a condition of continued employment on the contract, the employee shall:

(i) Abide by the terms of the statement; and
(ii) Notify the employer of any criminal drug or alcohol abuse conviction for an offense occurring in the workplace not later than 5 days after a conviction;

(i) Notify the procurement officer within 10 days after receiving notice under §J(2)(h)(ii), above, or otherwise receiving actual notice of a conviction;

(j) Within 30 days after receiving notice under §J(2)(h)(ii), above, or otherwise receiving actual notice of a conviction, impose either of the following sanctions or remedial measures on any employee who is convicted of a drug or alcohol abuse offense occurring in the workplace:

(i) Take appropriate personnel action against an employee, up to and including termination; or
(ii) Require an employee to satisfactorily participate in a bona fide drug or alcohol abuse assistance or rehabilitation program; and

(k) Make a good faith effort to maintain a drug and alcohol free workplace through implementation of §J(2)(a)—(j), above.

3. If the business is an individual, the individual shall certify and agree as set forth in §J(4), below, that the individual shall not engage in the unlawful manufacture, distribution, dispensing, possession, or use of drugs or the abuse of drugs or alcohol in the performance of the contract.

4. I acknowledge and agree that:

(a) The award of the contract is conditional upon compliance with COMAR 21.11.08 and this certification;

(b) The violation of the provisions of COMAR 21.11.08 or this certification shall be cause to suspend payments under, or terminate the contract for default under COMAR 21.07.01.11 or 21.07.03.15, as applicable; and

(c) The violation of the provisions of COMAR 21.11.08 or this certification in connection with the contract may, in the exercise of the discretion of the Board of Public Works, result in suspension and debarment of the business under COMAR 21.08.03.

L. CERTIFICATION OF CORPORATION REGISTRATION AND TAX PAYMENT

I FURTHER AFFIRM THAT:

1 The business named above is a (domestic ___) (foreign __) corporation registered in accordance with the Corporations and Associations Article, Annotated Code of Maryland, and that it is in good standing and has filed all of its annual reports, together with filing fees, with the Maryland State Department of Assessments and Taxation, and that the name and address of its resident agent filed with the State Department of Assessments and Taxation is (IF NOT APPLICABLE, SO STATE):

Name: _____
Address: _____
_____
_____

2. Except as validly contested, the business has paid, or has arranged for payment of, all taxes due the State of Maryland and has filed all required returns and reports with the Comptroller of the Treasury, the State Department of Assessments and Taxation, and the Department of Labor, Licensing, and Regulation, as applicable, and will have paid all withholding taxes due the State of Maryland prior to final settlement.

M. CONTINGENT FEES

I FURTHER AFFIRM THAT:

The business has not employed or retained any person, partnership, corporation, or other entity, other than a bona fide employee, bona fide agent, bona fide salesperson, or commercial selling agency working for the business, to solicit or secure the Contract, and that the business has not paid or agreed to pay any person, partnership, corporation, or other entity, other than a bona fide employee, bona fide agent, bona fide salesperson, or commercial selling agency, any fee or any other consideration contingent on the making of the Contract.

N. REPEALED

O. ACKNOWLEDGEMENT

I ACKNOWLEDGE THAT this Affidavit is to be furnished to the Procurement Officer and may be distributed to units of: (1) the State of Maryland; (2) counties or other subdivisions of the State of Maryland; (3) other states; and (4) the federal government. I further acknowledge that this Affidavit is subject to applicable laws of the United States and the State of Maryland, both criminal and civil, and that nothing in this Affidavit or any contract resulting from the submission of this bid or proposal shall be construed to supersede, amend, modify or waive, on behalf of the State of Maryland, or any unit of the State of Maryland having jurisdiction, the exercise of any statutory right or remedy conferred by the Constitution and the laws of Maryland with respect to any misrepresentation made or any violation of the obligations, terms and convenants undertaken by the above business with respect to (1) this Affidavit, (2) the contract, and (3) other Affidavits comprising part of the contract.

I DO SOLEMNLY DECLARE AND AFFIRM UNDER THE PENALTIES OF PERJURY THAT THE CONTENTS OF THIS AFFIDAVIT ARE TRUE AND CORRECT TO THE BEST OF MY KNOWLEDGE, INFORMATION, AND BELIEF.

Date: _____ By: _____
(Authorized Representative and Affiant)

COMPREHENSIVE SIGNATURE PAGE 1 OF 2

THE BIDDER IS HEREBY NOTIFIED THAT THIS DOCUMENT SHALL BE SIGNED IN INK IN ORDER FOR THE BID TO BE ACCEPTED. BY SIGNING, THE BIDDER CERTIFIES THAT HE/SHE WILL COMPLY IN EVERY ASPECT WITH THESE SPECIFICATIONS.

FURTHER, I DO SOLEMNLY DECLARE AND AFFIRM UNDER THE PENALTIES OF PERJURY THAT THE CONTENTS OF THIS AFFIDAVIT (PARAGRAPHS A-N) ARE TRUE AND CORRECT TO THE BEST OF MY KNOWLEDGE, INFORMATION, AND BELIEF.

This bid form shall be filled out legibly in ink or typed. The bid, if submitted by an individual, shall be signed by an individual; if submitted by a partnership, shall be signed by such member or members of the partnership as have authority to bind the partnership; if submitted by a corporation the same shall be signed by the President and attested by the Secretary or an Assistant Secretary. If not signed by the President as aforesaid, there must be attached a copy of that portion of the By-Laws, or a copy of a Board resolution, duly certified by the Secretary, showing the authority of the person so signing on behalf of the corporation. In lieu thereof, the corporation may file such evidence with the Administration, duly certified by the Secretary, together with a list of the names of those officers having authority to execute documents on behalf of the corporation, duly certified by the Secretary, which listing shall remain in full force and effect until such time as the Administration is advised in writing to the contrary. In any case where a bid is signed by an Attorney in Fact the same must be accompanied by a copy of the appointing document, duly certified.

IF AN INDIVIDUAL:

NAME:_____

_____
Street and/or P.O. Box

_____ _____
City State Zip Code Fed ID or SSN

_____(SEAL)_____
Signature Date

_____
Print Signature

WITNESS:_____
Signature

_____
Print Signature

COMPREHENSIVE SIGNATURE PAGE 2 OF 2

IF A PARTNERSHIP:

NAME OF PARTNERSHIP:_____

_____
Street and/or P.O. Box

_____ _____
City State Zip Code Fed ID or SSN

BY:_____(SEAL) _____
Member Signature Date

_____
Print Signature

TITLE:_____ WITNESS:_____
Signature

_____
Print Signature

IF A CORPORATION:

NAME OF CORPORATION:_____

_____
Street and/or P.O. Box

_____ _____
City State Zip Code Fed ID or SSN

STATE OF INCORPORATION:_____

BY:_____(SEAL) _____
Signature Date

_____
Print Signature

TITLE:_____ WITNESS:_____
Secretary's Signature

_____
Print Signature

MDOT DBE FORM A - (MDOT-OP 016-2)
FEDERALLY-FUNDED CONTRACTS (BIDS ONLY)
CERTIFIED DBE UTILIZATION AND FAIR SOLICITATION AFFIDAVIT
Page 1 of 2

THIS AFFIDAVIT MUST BE INCLUDED WITH THE BID. IF THE BIDDER FAILS TO ACCURATELY COMPLETE AND SUBMIT THIS AFFIDAVIT AS REQUIRED, THE BID SHALL BE DEEMED NOT RESPONSIVE.

In connection with the proposal submitted in response to Solicitation No. AX6895168, I affirm the following:

1. **DBE Participation (PLEASE CHECK ONLY ONE)**

☐ I have met the overall certified Disadvantaged Business Enterprise (DBE) participation goal of **ZERO** percent (**0**%). I agree that the DBE firms listed in the DBE Participation Schedule - Part 2 of the MDOT DBE Form B (Federally-Funded Contracts – Bids Only) will be used to accomplish the DBE participation goal for this Contract for at least the dollar amounts set forth therein.

OR

☐ I conclude that I am unable to achieve the DBE participation goal. I hereby request a waiver of the overall goal. Within 10 business days of receiving notice that our firm is the apparent awardee or as requested by the Procurement Officer, I will submit a written waiver request and all required documentation in accordance with COMAR 21.11.03.11. I agree that the DBE firms listed in the DBE Participation Schedule - Part 2 of the MDOT DBE Form B (Federally-Funded Contracts – Bids Only) will be used to accomplish the DBE participation goal for this Contract for at least the dollar amounts set forth therein.

2. **Additional DBE Documentation**

I understand that if I am notified that I am the apparent awardee or as requested by the Procurement Officer, I must submit the following documentation within 10 business days of receiving such notice:
(a) Outreach Efforts Compliance Statement (MDOT DBE Form C - Federally-Funded Contracts – Bids Only);
(b) Subcontractor Project Participation Statement (MDOT DBE Form D - Federally-Funded Contracts – Bids Only);
(c) DBE Waiver Request documentation per COMAR 21.11.03.11 (if waiver was requested); and
(d) Any other documentation required by the Procurement Officer to ascertain bidder's responsibility in connection with the certified DBE participation goal.

I acknowledge that if I fail to return each completed document (in 2 (a) through (d)) within the required time, the Procurement Officer may determine that I am not responsible and therefore not eligible for contract award.

MDOT DBE FORM A - (MDOT-OP 016-2)
FEDERALLY-FUNDED CONTRACTS (BIDS ONLY)
CERTIFIED DBE UTILIZATION AND FAIR SOLICITATION AFFIDAVIT
Page 2 of 2

3. Information Provided to DBE firms

In the solicitation of subcontract quotations or offers, DBE firms were provided not less than the same information and amount of time to respond as were non-DBE firms.

I solemnly affirm under the penalties of perjury that the information in this affidavit is true to the best of my knowledge, information and belief.

_____	_____
Company Name	Signature of Representative
_____	_____
Address	Printed Name and Title
_____	_____
City, State and Zip Code	Date

SUBMIT THIS AFFIDAVIT WITH BID/PROPOSAL

MDOT DBE FORM B - (MDOT-OP 017-2)
FEDERALLY-FUNDED CONTRACTS (BIDS ONLY)
DBE PARTICIPATION SCHEDULE

PART 1 – INSTRUCTIONS FOR DBE PARTICIPATION SCHEDULE
Page 1 of 3

PARTS 2 AND 3 MUST BE INCLUDED WITH THE BID. IF THE BIDDER FAILS TO ACCURATELY COMPLETE AND SUBMIT PART 2 AND 3 WITH THE BID AS REQUIRED, THE BID SHALL BE DEEMED NOT RESPONSIVE.

***** STOP *****
FORM INSTRUCTIONS
PLEASE READ BEFORE COMPLETING THIS FORM

1. Please refer to the Maryland Department of Transportation (MDOT) DBE Directory at www.mdot.state.md.us to determine if a firm is certified for the appropriate North American Industry Classification System ("NAICS") Code **and** the product/services description (specific product that a firm is certified to provide or specific areas of work that a firm is certified to perform). For more general information about NAICS, please visit www.naics.com. Only those specific products and/or services for which a firm is certified in the MDOT Directory can be used for purposes of achieving the DBE participation goal.

2. In order to be counted for purposes of achieving the DBE participation goal, the firm must be certified for that specific NAICS ("DBE" for Federally-funded projects designation after NAICS Code). **WARNING:** If the firm's NAICS Code is in **graduated status**, such services/products **will not be counted** for purposes of achieving the DBE participation goal. Graduated status is clearly identified in the MDOT Directory (such graduated codes are designated with the letter "G" after the appropriate NAICS Code).

3. Examining the NAICS Code is the **first step** in determining whether a DBE firm is certified and eligible to receive DBE participation credit for the specific products/services to be supplied or performed under the contract. The **second step** is to determine whether a firm's Products/Services Description in the DBE Directory includes the products to be supplied and/or services to be performed that are used to achieve the DBE participation goal.

4. If you have any questions as to whether a firm is certified to perform the specific services or provide specific products, please call MDOT's Office of Minority Business Enterprise at 1-800-544-6056 or send an email to mbe@mdot.state.md.us.

5. The Contractor's subcontractors are considered second-tier subcontractors. Third-tier contracting used to meet a DBE goal is to be considered the exception and not the rule. The following two conditions must be met before MDOT, its Modal Administrations and the Maryland Transportation Authority may approve a third-tier contracting agreement: (a) the bidder must request in writing approval of each third-tier contract arrangement, and (b) the request must contain specifics as to why a third-tier contracting arrangement should be approved. These documents must be submitted with the bid in Part 2 of this DBE Participation Schedule.

MDOT DBE FORM B - (MDOT-OP 017-2)
FEDERALLY-FUNDED CONTRACTS (BIDS ONLY)
PART 1 – INSTRUCTIONS FOR DBE PARTICIPATION SCHEDULE
Page 2 of 3

6. For each DBE firm that is being used as supplier/wholesaler/regular dealer/broker/manufacturer, please follow these instructions for calculating the **dollar amount of the subcontract for purposes of achieving the DBE participation goal**:

   A. Is the firm certified as a broker of the products/supplies? If the answer is YES, please continue to Item C. If the answer is NO, please continue to Item B.

   B. Is the firm certified as a supplier, wholesaler, regular dealer, or manufacturer of such products/supplies? If the answer is YES, continue to Item D. If the answer is NO, continue to Item C only if the DBE firm is certified to perform trucking/hauling services under NAICS Codes 484110, 484121, 484122, 484210, 484220 and 484230. If the answer is NO and the firm is not certified under these NAICS Codes, then no DBE participation credit will be given for the supply of these products.

   C. For purposes of achieving the DBE participation goal, you may count only the amount of any reasonable fee that the DBE firm will receive for the provision of such products/supplies - not the total subcontract amount or the value (or a percentage thereof) of such products and/or supplies. In Column 5 of the DBE Participation Schedule, please state the amount of any reasonable fee that the DBE firm will receive for the provision of such products/services in Section 5.3.

   D. Is the firm certified as a manufacturer (refer to the firm's NAICS Code and specific description of products/services) of the products/supplies to be provided? If the answer is NO, please continue to Item E. If the answer is YES, for purposes of achieving the DBE participation goal, you may count the total amount of the subcontract. In Column 5 of the DBE Participation Schedule, please state the total amount of the subcontract in Section 5.1.

   E. Is the firm certified as a supplier, wholesaler and/or regular dealer? If the answer is YES (i) if the DBE firm is furnishing and installing the materials and is certified to perform these services, please include in Section 5.1 the total value of the subcontract amount (including full value of supplies); or (ii) if the firm is only being used as a supplier, wholesaler and/or regular dealer or is not certified to install the supplies/materials, for purposes of achieving the DBE participation goal, you may only count sixty percent (60%) of the value of the subcontract for these supplies/products (60% Rule). In Column 5, Section 5.2 of the DBE Participation Schedule, please state amount of the subcontract for these supplies/products only (not installation) and sixty percent (60%) of such value.

7. Cumulative credit given for the use of all DBE suppliers/wholesalers/regular dealers/brokers/manufacturer in the DBE Participation Schedule cannot exceed sixty percent (60%) of the entire DBE participation goal. For example, if your bid is $100,000 and you have indicated that you will achieve $25,000 in DBE Participation, the cumulative participation by DBE firms that are suppliers, manufacturers, wholesalers, brokers and regular dealers cannot exceed $15,000 (or 60% of $25,000).

MDOT DBE FORM B - (MDOT-OP 017-2)
FEDERALLY-FUNDED CONTRACTS (BIDS ONLY)
PART 1 – INSTRUCTIONS FOR DBE PARTICIPATION SCHEDULE
Page 3 of 3

8. Please note that for USDOT-funded projects, a DBE prime may count towards its DBE participation goal, work performed by its own forces. Include information about the DBE prime in Part 2.

9. **WARNING:** The percentage of DBE participation, computed using the dollar amounts in Column 5 for all of the DBE firms listed in Part 2, MUST equal at least the DBE participation goal as set forth in MDOT DBE Form A – Federally-Funded Contracts (Bids Only) for this solicitation. If a bidder is unable to achieve the DBE participation goal, then the bidder must request a waiver in Form A or the bid shall be deemed not responsive. You may wish to use the Worksheet shown below to assist you in calculating the percentages and confirming that you have met the applicable DBE participation goal.

WORKSHEET

Total DBE Firm Participation Amount	$_____
(Add amounts listed for all DBE Firms in Column 5 of DBE Participation Schedule)	
Divide by Total Contract Amount	+_____
Percent Overall DBE Participation	**=_____%**

MDOT DBE FORM B - (MDOT-OP 017-2)
FEDERALLY-FUNDED CONTRACTS (BIDS ONLY)
PART 2 – DBE PARTICIPATION SCHEDULE

PARTS 2 AND 3 MUST BE INCLUDED WITH THE BID. IF THE BIDDER FAILS TO ACCURATELY COMPLETE AND SUBMIT PART 2 AND 3 WITH THE BID AS REQUIRED, THE BID SHALL BE DEEMED NOT RESPONSIVE.

Page __ of ___

Prime Contractor	Project Description	Solicitation Number

List Information for each Certified MBE Subcontractor used to achieve the DBE Participation Goal.

COLUMN 1	COLUMN 2	COLUMN 3	COLUMN 4	COLUMN 5 **Unless the bidder requested a waiver in MDOT DBE Form A – Federally Funded Contracts (Bids Only) for this solicitation, the cumulative DBE participation for all DBE firms listed herein must equal at least the DBE participation goal set forth in Form A.**
Name of DBE Subcontractor and tier	**Certification No. and DBE Classification**	**Total Subcontractor Amount**	**NAICS Codes/s** **NAICS Code/s of the specific products to be supplied or services to be performed by the DBE firm**	**Dollar Amount(s) for purposes of achieving the DBE Participation Goal.** State the dollar amount of the products/services in Line 5.1 except for those services or products where the DBE firm is being used as a wholesaler, supplier, regular dealer, or broker. For those items of work where the DBE firm is being used as a supplier, wholesaler and/or regular dealer complete Line 5.2 using the 60% Rule. For those items of work where the DBE firm is being used as a broker, complete Line 5.3.
☐ Please check if DBE firm is a third-tier contractor (if applicable). Please submit written documents in accordance with Section 5 of Part 1 - Instructions	Certification Number: _____ ☐ Women-Owned ☐ African American-Owned ☐ Other DBE Classification	**$**		**5.1 Subcontract Amount for Products/Services** (Excluding Products/Services from Suppliers, Wholesalers, Regular Dealers and Brokers) $ **5.2 Amount for Items of Work where the MBE firm is being used as Suppliers, Wholesalers and/or Regular Dealers)** (Please refer to Section 6(E) in Part 1 - Instructions). Total value of Supplies/Products $ X 60% (60% Rule) = $ (amount for purposes of achieving the DBE Participation Goal). **5.3 Amount of Fee where DBE firm is being used as Broker (**Please refer to Section 6(C) in Part 1 - instructions). _____$

☐Please check if Continuation Sheets are attached.

MDOT DBE FORM B - (MDOT-OP 017-2)
FEDERALLY-FUNDED CONTRACTS (BIDS ONLY)
CONTINUATION SHEET
Page __ of ___

COLUMN 1	COLUMN 2	COLUMN 3	COLUMN 4	COLUMN 5 **Unless the bidder requested a waiver in MDOT DBE Form A – Federally Funded Contracts (Bids Only) for this solicitation, the cumulative DBE participation for all DBE firms listed herein must equal at least the DBE participation goal set forth in Form A.**
Name of DBE Subcontractor and tier	**Certification No. and DBE Classification**	**Total Subcontractor Amount**	**NAICS Codes/s** **NAICS Code/s of the specific products to be supplied or services to be performed by the DBE firm**	**Dollar Amount(s) for purposes of achieving the DBE Participation Goal.** State the dollar amount of the products/services in Line 5.1 except for those services or products where the DBE firm is being used as a wholesaler, supplier, regular dealer, or broker. For those items of work where the DBE firm is being used as a supplier, wholesaler and/or regular dealer complete Line 5.2 using the 60% Rule. For those items of work where the DBE firm is being used as a broker, complete Line 5.3.
☐ Please check if DBE firm is a third-tier contractor (if applicable). Please submit written documents in accordance with Section 5 of Part 1 - Instructions	Certification Number: _____ ☐ Women-Owned ☐ African American-Owned ☐ Other DBE Classification	**$**		**5.1 Subcontract Amount for Products/Services** (Excluding Products/Services from Suppliers, Wholesalers, Regular Dealers and Brokers) $ **5.2 Amount for Items of Work where the MBE firm is being used as Suppliers, Wholesalers and/or Regular Dealers)** (Please refer to Section 6(E) in Part 1 - Instructions). Total value of Supplies/Products $ X 60% (60% Rule) = $ (amount for purposes of achieving the DBE Participation Goal). **5.3 Amount of Fee where DBE firm is being used as Broker (**Please refer to Section 6(C) in Part 1 - instructions). _____$

MDOT DBE FORM B - (MDOT-OP 017-2)
FEDERALLY-FUNDED CONTRACTS (BIDS ONLY)
PART 3 – CERTIFICATION FOR DBE PARTICIPATION SCHEDULE

PARTS 2 AND 3 MUST BE INCLUDED WITH THE BID. IF THE BIDDER FAILS TO ACCURATELY COMPLETE AND SUBMIT PART 2 AND 3 WITH THE BID AS REQUIRED, THE BID SHALL BE DEEMED NOT RESPONSIVE.

I hereby affirm that I have reviewed the Products and Services Description (specific product that a firm is certified to provide or areas of work that a firm is certified to perform) set forth in the MDOT DBE Directory for each of the DBE firms listed in Part 2 of this DBE Form B for purposes of achieving the DBE participation goal that was identified in the DBE Form A that I submitted with this solicitation, and that the DBE firms listed are only performing those products/services/areas of work for which they are certified. I also hereby affirm that I have read and understand the form instructions set forth in Part 1 of this DBE Form B.

I solemnly affirm under the penalties of perjury that the contents of Parts 2 and 3 of MDOT DBE Form B are true to the best of my knowledge, information and belief.

_____	_____
Company Name	Signature of Representative
_____	_____
Address	Printed Name and Title
_____	_____
City, State and Zip Code	Date

INFORMATION REQUIRED TO BE SUBMITTED FOR FEDERALLY ASSISTED CONTRACTS:

(a) Each bidder shall provide the following information:

NAME OF FIRM:_____

_____
Street and/or P.O. Box

_____
City State Zip Code

____ DBE ____ Non-DBE Age of the firm ____ years
Annual gross receipts per last calendar year _____<$500,000 ____$500,000-1,000,000
____$1,000,000-3,000,000 ____$3,000,000-5,000,000 ____$5,000,000-10,000,000
____>$10,000,000

(b) Each bidder shall provide the following information for each firm quoting or considered as subcontractors:

NAME OF FIRM:_____

_____
Street and/or P.O. Box

_____
City State Zip Code

____ DBE ____ Non-DBE Age of the firm ____ years
Annual gross receipts per last calendar year _____<$500,000 ____$500,000-1,000,000
____$1,000,000-3,000,000 ____$3,000,000-5,000,000 ____$5,000,000-10,000,000
____> $10,000,000

NAME OF FIRM:_____

_____
Street and/or P.O. Box

_____
City State Zip Code

____ DBE ____ Non-DBE Age of the firm ____ years
Annual gross receipts per last calendar year _____<$500,000 ____$500,000-1,000,000
____$1,000,000-3,000,000 ____$3,000,000-5,000,000 ____$5,000,000-10,000,000
____> $10,000,000

NAME OF FIRM:_____

_____
Street and/or P.O. Box

_____
City State Zip Code

____ DBE ____ Non-DBE Age of the firm ____ years
Annual gross receipts per last calendar year _____<$500,000 ____$500,000-1,000,000
____$1,000,000-3,000,000 ____$3,000,000-5,000,000 ____$5,000,000-10,000,000
____> $10,000,000

NAME OF FIRM:_____

_____
Street and/or P.O. Box

_____
City State Zip Code

____ DBE ____ Non-DBE Age of the firm ____ years
Annual gross receipts per last calendar year _____<$500,000 ____$500,000-1,000,000
____$1,000,000-3,000,000 ____$3,000,000-5,000,000 ____$5,000,000-10,000,000
____> $10,000,000

NAME OF FIRM:_____

_____
Street and/or P.O. Box

_____
City State Zip Code

____ DBE ____ Non-DBE Age of the firm ____ years
Annual gross receipts per last calendar year _____<$500,000 ____$500,000-1,000,000
____$1,000,000-3,000,000 ____$3,000,000-5,000,000 ____$5,000,000-10,000,000
____> $10,000,000

Submit additional copies of this page as page 26A of 28, 26B of 28, etc. as necessary, and place them as the last pages in the Invitation for Bids. Place an "X" for "NO" on the last copy. Any additional Copies: _____ NO _____ YES

EXTRA WORK, CONTRACT TIME, BONDING, LIQUIDATED DAMAGES, AND PROPOSAL GUARANTY

EXTRA WORK. It is further proposed to do all "Extra Work" which may be required to complete the work contemplated at unit prices or lump sum prices to be agreed upon in writing prior to starting such extra work, or if such prices or sums cannot be agreed upon, to perform such work on a Force Account basis as specified in TC-7.03.

CONTRACT TIME. To commence work as specified in the "Notice to Proceed" and to prosecute the work to complete the contract within/or before

Friday, December 10, 2010 (Calendar Date)

Any delay in awarding or the execution of this contract will not be considered as a basis for any monetary claim, however, an extension of time may be considered by the Administration, if warranted.

BONDING. When the Contractor's bid is $100,000 or more, the Contractor shall furnish a Payment Bond and a Performance Bond in the full amount of the Contract Award as security for the construction and completion of the contract in conformance with the Plans, Standard Specifications, revisions thereto, General Provisions and Special Provisions.

To guarantee all of the work performed under this contract to be done in conformance with the Standard Specifications, revisions thereto, General Provisions and Special Provisions in a good workmanlike manner and to renew or repair any work which may be rejected due to defective materials or workmanship, prior to final completion and acceptance of the work, also we have the equipment, labor, supervision and financial capacity to perform this contract either with our organization or with Subcontractors.

LIQUIDATED DAMAGES. The Contractor is hereby advised that liquidated damages in the amount of

ONE THOUSAND SEVEN HUNDRED SEVENTY dollars (**$1,770**) per calendar day

will be assessed for unauthorized extensions beyond the contracted time of completion.

PROPOSAL GUARANTY. A bid security is not required on Contract Proposals under $100,000.

A bid security totaling at least five percent (5%) of the bid amount will be required on contracts of $100,000 or over.

Acceptable forms of security for bid guaranty shall be:

(1) A bond in a form satisfactory to the State underwritten by a company licensed to issue bonds in this State;

(2) A bank certified check, bank cashier's check, bank treasurer's check, or cash;

(3) Pledge of security backed by the full faith and full credit of the United States government or bonds issued by the State of Maryland.

Enclosed herewith, find bid security based on at least five percent (5%) of the aggregate amount of the bid submitted, and made payable to the "State of Maryland". This bid security is a Proposal Guarantee (which is understood will be forfeited in the event the contract is not executed, if awarded to the signer of this affidavit).

MARYLAND STATE HIGHWAY ADMINISTRATION

SUBCONTRACTING

Subcontracting by the Prime Contractor. Form OOC 42 Request for Approval of Subcontractor shall be used by the Prime Contractor to request approval of a Subcontractor and also to ensure that a formal Subcontract has been or will be written and kept on file by the Prime Contractor. Completion and submittal of the form by the Prime Contractor acknowledges that the Administration's Contracting Officer may require the submission of the written Subcontract for review by the Administration and/or FHWA.

Lower Tier Subcontracting by an Approved Subcontractor. Form OOC 43 Subcontractor's Request for Approval of Lower Tier Subcontractor shall be used by an Approved Subcontractor to request approval of a Lower Tier Subcontractor and also to ensure that a formal Subcontract has been or will be written and kept on file by the Subcontractor. Completion and submittal of the form by the Subcontractor acknowledges that the Administration's Contracting Officer may require the submission of the written Subcontract for review by the Administration and/or FHWA.

Form Acquisitions. Maryland State Highway Administration Form OOC 42 and Form OOC 43 may be acquired through the Administration's Contracts Award Team or District Office. All questions should be directed to the Office of Construction, Contracts Award Team.

It is the Administration's intention to randomly select during each calendar quarter a representative sample of written Subcontracts for review. This review will be conducted by the Office of Construction's Contracts Award Team.