NOTE 2 GRATES ARE REQUIRED FOR REPLACEMENT WHEN DOUBLE 'S' INLET IS INVOLVED.

GENERAL NOTES

1. GRATES TO BE SQUARE FLAT & TRUE
2. STRUCTURAL STEEL SHALL BE ASTM DESIGNATION A-36.
3. GRATES TO BE GALVANIZED AFTER FABRICATION IN ACCORDANCE WITH ASTM DESIGNATION A-123.
4. SEE LATEST S.H.A.SPECIFICATIONS.

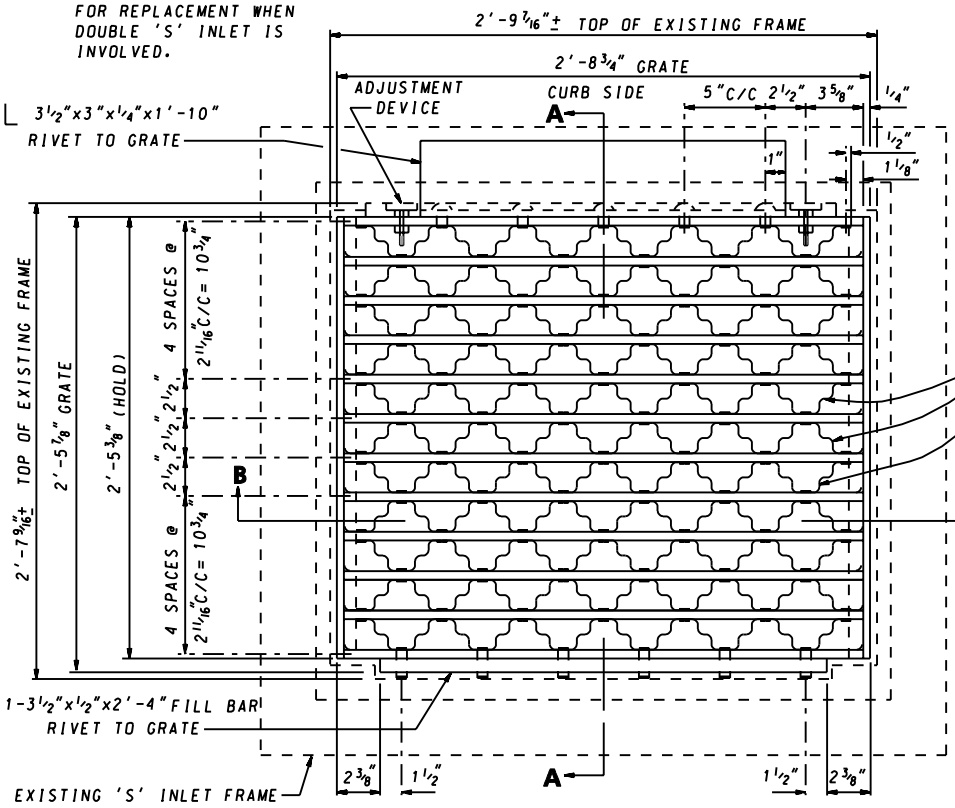

A "LOCKING DEVICE", TO BE DEVELOPED AND SUPPLIED BY THE CONTRACTOR, AND APPROVED BY THE S.H.A. ASSISTANT CHIEF ENGINEER-DESIGN FOR THE PURPOSE OF LOCKING THE GRATE IN-PLACE, IS REQUIRED PRIOR TO THE AWARD OF THE CONTRACT.

ANY DEVIATIONS FROM THE RETICULAR DESIGN AS SHOWN, MUST BE APPROVED BY THE S.H.A. ASSISTANT CHIEF ENGINEER-DESIGN.

PLAN

1/2-13 HEX THIN NUTS TYPE A-307 STEEL GALVANIZED AS PER A.S.T.M. A-153 & TAPPED OVERSIZE TO FIT 1/2" Φ GALVANIZED STUD

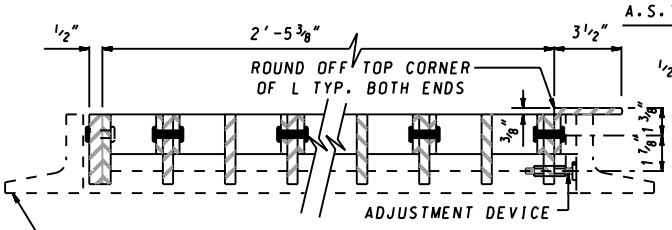

SECTION A-A

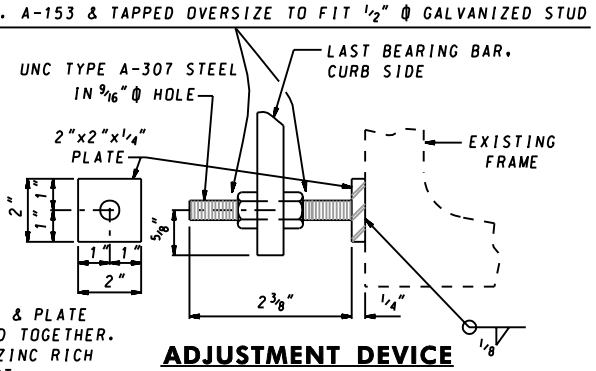

ADJUSTMENT DEVICE

(TWO PER GRATE)

NOTE

GALV. THE STUD & PLATE SEPARATELY. WELD TOGETHER. TOUCH UP WITH ZINC RICH ZRC PAINT.

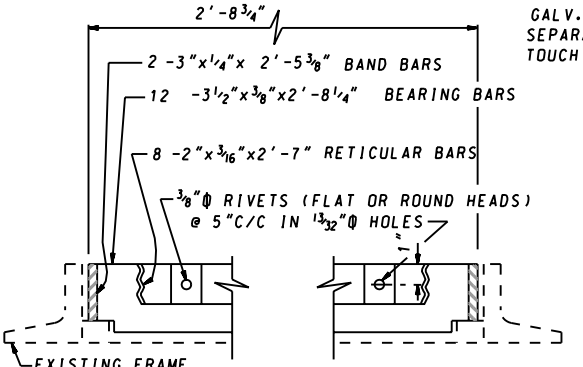

SECTION B-B

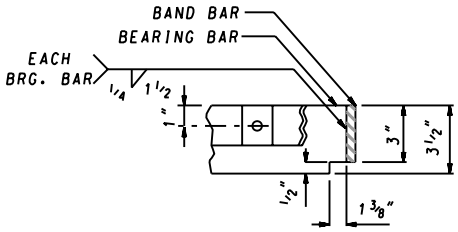

GRATING DETAIL

SPECIFICATION	CATEGORY CODE ITEMS
APPROVED	Kirk G. McCallum DIRECTOR – OFFICE OF HIGHWAY DEVELOPMENT

APPROVAL • SHA REVISIONS		APPROVAL • FEDERAL HIGHWAY ADMINISTRATION	
APPROVAL	12-20-74	APPROVAL	1-14-75
REVISED	10-1-01	REVISED	2-8-83
REVISED		REVISED	
REVISED		REVISED	

Maryland Department of Transportation
STATE HIGHWAY ADMINISTRATION

STANDARDS FOR HIGHWAYS AND INCIDENTAL STRUCTURES

STANDARD TYPE S INLET & COMBINATION RETICULAR REPLACEMENT GRATE

STANDARD NO. MD 379.08