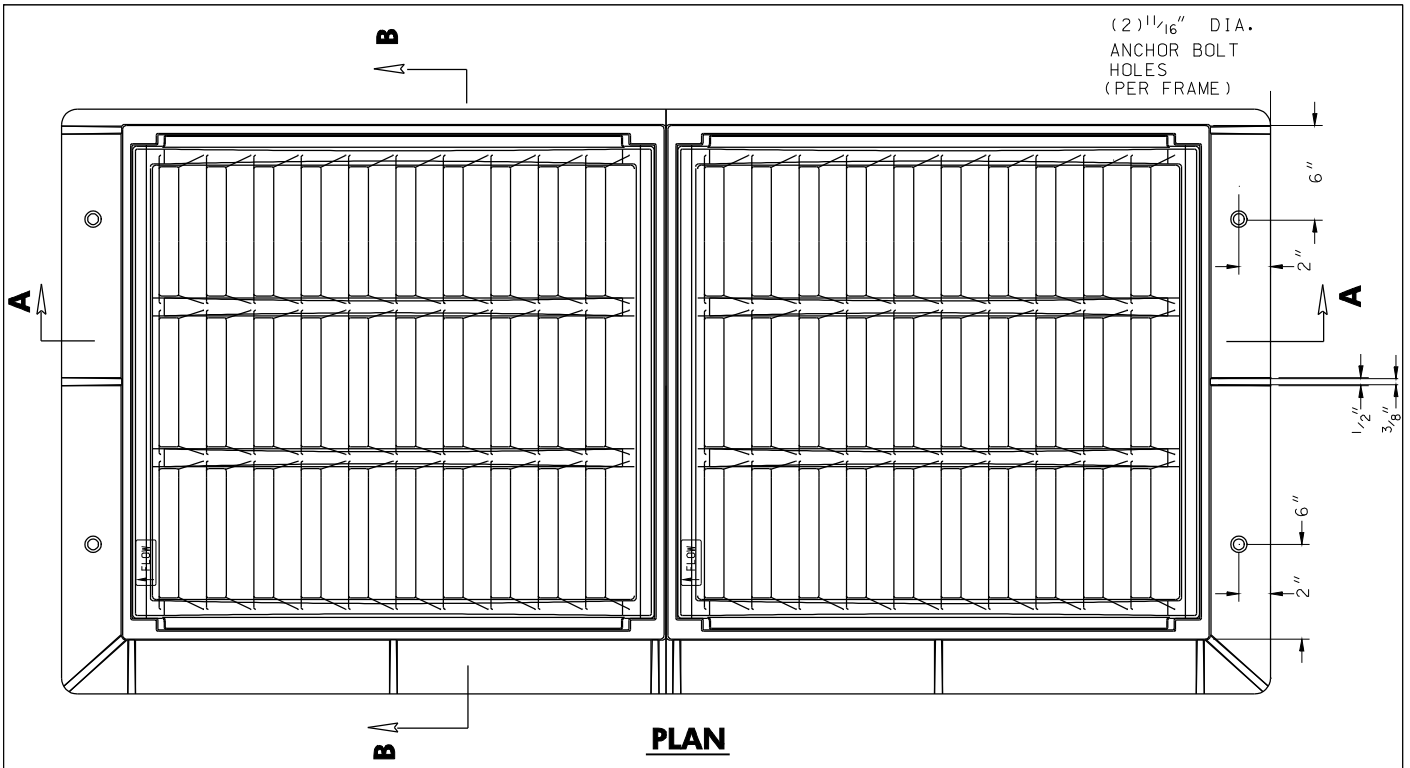

PLAN

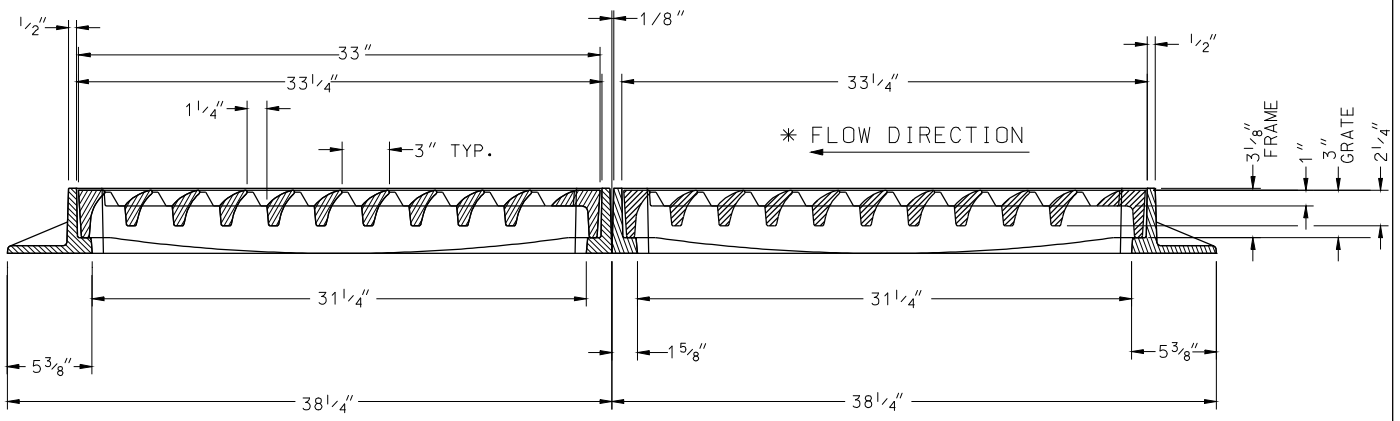

SECTION A–A

NOTES:

MATERIAL: CAST GRAY IRON ASTM A-48, CLASS 35B
FINISH: NO PAINT
WEIGHT (MIN.): FRAME 152#, FRAME 152#, GRATE 295# EA.

FRAMES TO BE CASTING WITH FLANGE CUT, AS SHOWN, WHEN INLET TO BE PLACED ADJACENT TO CURB OPENING. FOR FULL FLANGE/DETAILS, REFER TO THE RESPECTIVE STANDARD PLATES FOR TYPE "S" INLET.

* CONTRACTOR IS RESPONSIBLE FOR CORRECT ORIENTATION OF THE CV-GRATE TOWARD THE DIRECTION OF FLOW.

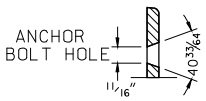

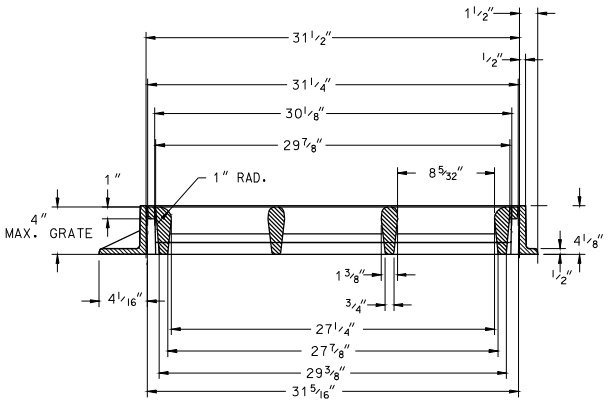

SECTION B–B

SPECIFICATION 305	
APPROVED	Kirk G. McClelland DIRECTOR – OFFICE OF HIGHWAY DEVELOPMENT

APPROVAL • SHA REVISIONS		APPROVAL • FEDERAL HIGHWAY ADMINISTRATION	
APPROVAL	2-10-04	APPROVAL	3-31-04
REVISED	7-1-09	REVISED	7-27-09
REVISED		REVISED	
REVISED		REVISED	

State Highway Administration

Maryland Department of Transportation
STATE HIGHWAY ADMINISTRATION

STANDARDS FOR HIGHWAYS AND INCIDENTAL STRUCTURES

CURVE VANE GRATES WITH FRAME FOR DOUBLE TYPE "S" INLET (S2-CV)

STANDARD NO. MD 379.05-01