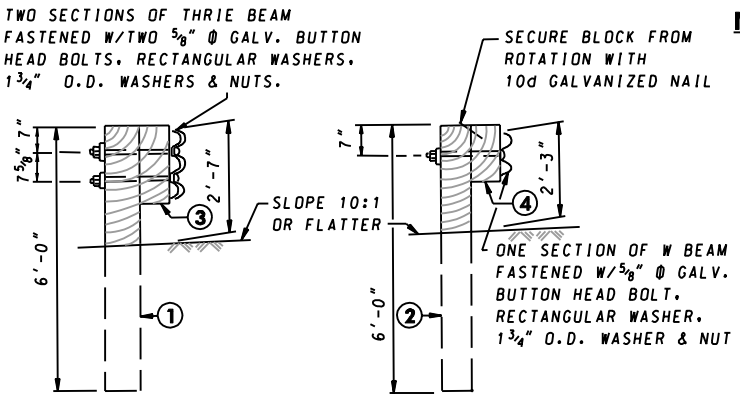

SECTION A-A **SECTION B-B**

NOTES

1. THRIE BEAM TERMINAL CONNECTOR, THRIE BEAM SECTIONS AND W BEAM SECTIONS SHALL BE LAPPED IN THE DIRECTION OF TRAFFIC.
2. THE WOOD POSTS AND BLOCKS SHALL HAVE A STRESS GRADE OF 1200 PSI OR MORE.
3. RECTANGULAR WASHERS SHALL BE USED AT THE THRIE BEAM TERMINAL CONNECTOR AND POSTS A THROUGH F.
4. SEE STD. MD 605.51-01 FOR DETAILS OF THRIE BEAM, SPLICE, TERMINAL CONNECTOR, TRANSITION SECTIONS, SQUARE PLATE AND RECTANGULAR WASHERS.
5. THE 12'- 8" CONCRETE SINGLE FACE END IS PAID FOR PER EACH FOR F SHAPE TO VERITCAL CONCRETE TRAFFIC BARRIER SINGLE FACE TERMINAL END.

WOOD POST & BLOCK DIMENSIONS	
1	10" X 10" X 6'-0"
2	8" X 8" X 6'-0"
3	6" X 8" X 22 1/2"
4	6" X 8" X 14"

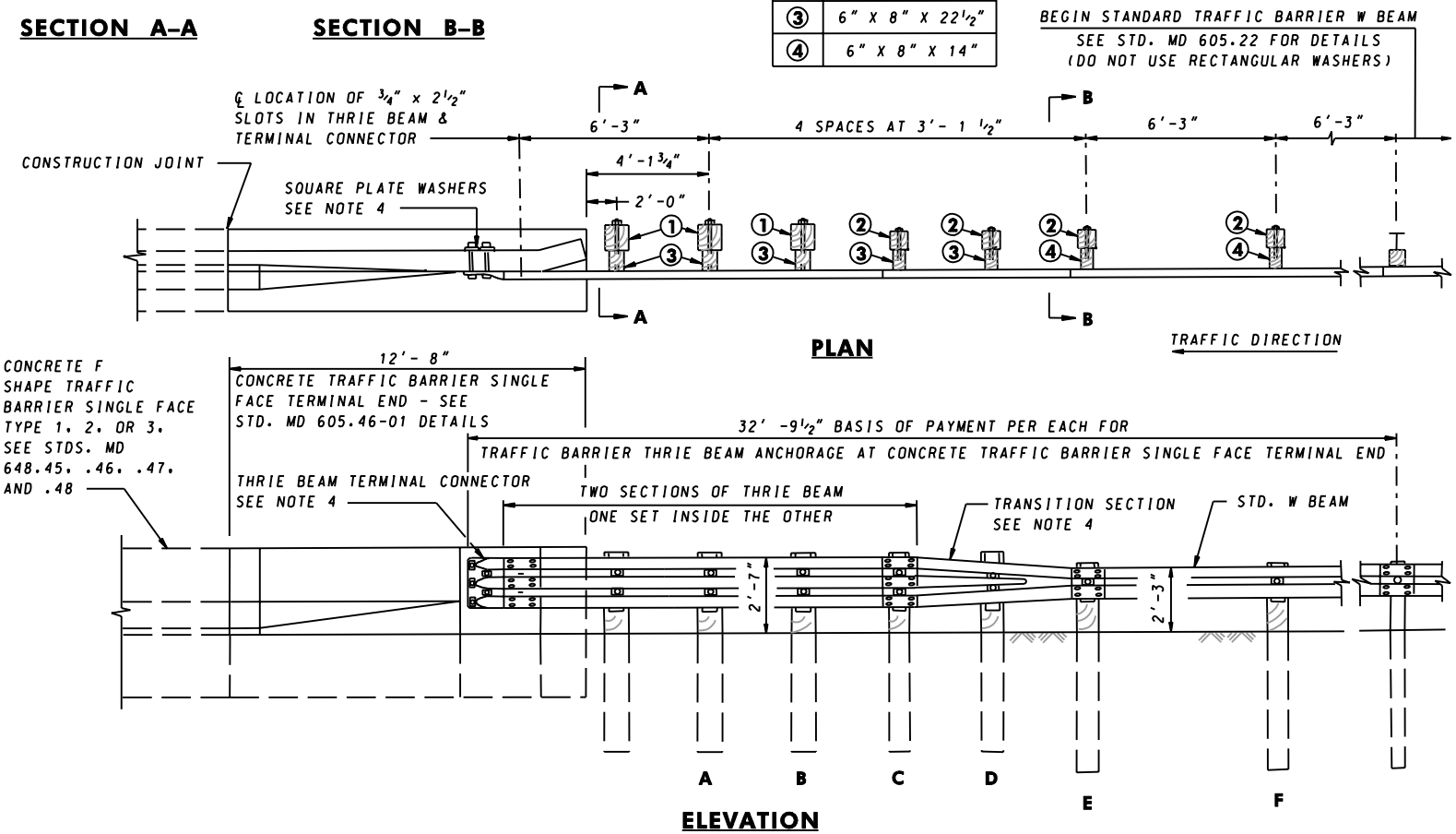

PLAN

ELEVATION

SPECIFICATION 605

CATEGORY CODE ITEMS

APPROVED

Kirk G. McCall
DIRECTOR - OFFICE OF HIGHWAY DEVELOPMENT

SHA State Highway Administration

APPROVAL • SHA REVISIONS	APPROVAL • FEDERAL HIGHWAY ADMINISTRATION
APPROVAL 2-10-04	APPROVAL 3-31-04
REVISED	REVISED
REVISED	REVISED
REVISED	REVISED

Maryland Department of Transportation
STATE HIGHWAY ADMINISTRATION

STANDARDS FOR HIGHWAYS AND INCIDENTAL STRUCTURES

TRAFFIC BARRIER THRIE BEAM ANCHORAGE AT F SHAPE CONCRETE TRAFFIC BARRIER SINGLE FACE TERMINAL END

STANDARD NO. MD 605.49