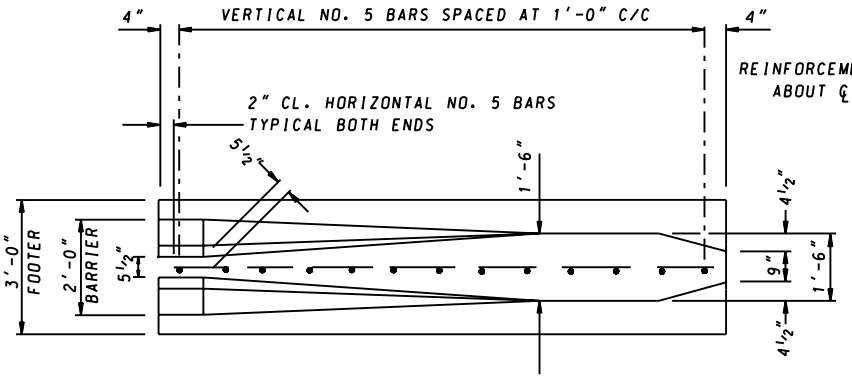

PLAN

(SHOWN WITHOUT THRIE BEAM ANCHORAGE)

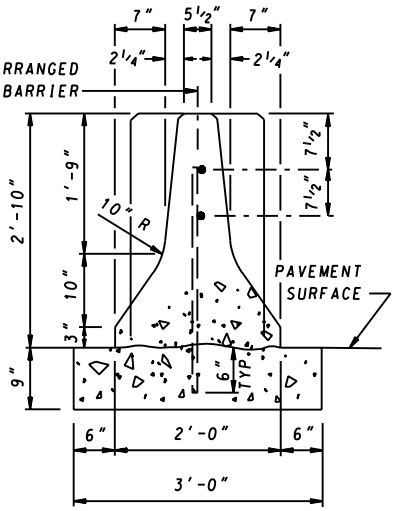

VIEW-END A

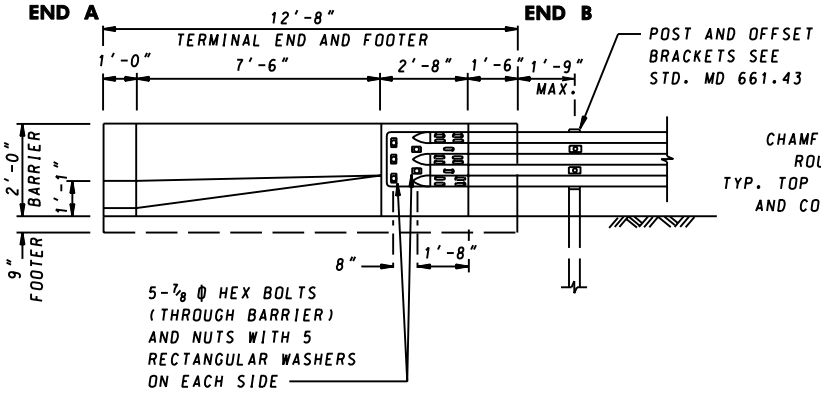

ELEVATION

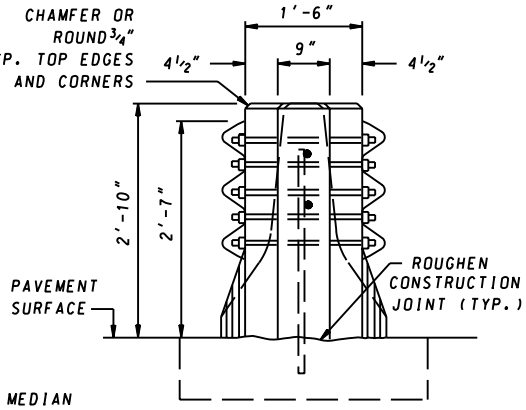

VIEW-END B

NOTES

1. THE CONCRETE MEDIAN TRAFFIC BARRIER TERMINAL END AND CONCRETE FOOTER SHALL BE CAST SEPARATELY USING CONCRETE MIX NO.6 (4500 PSI).
2. ALL REINFORCEMENT BARS, INCLUDING ENDS, SHALL BE EPOXY COATED.
3. SEE STANDARD MD 605.50 FOR THRIE BEAM AND W BEAM POST LAYOUT.

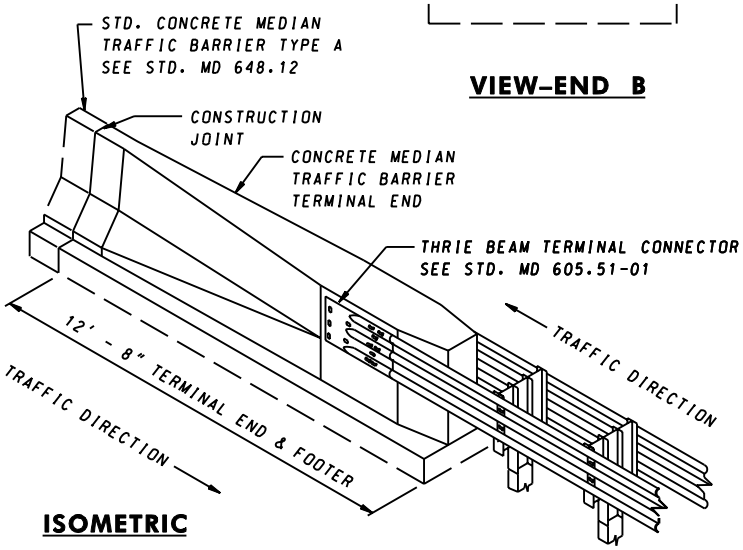

ISOMETRIC

SPECIFICATION	CATEGORY CODE ITEMS
APPROVED	Kirk G. McCallum DIRECTOR – OFFICE OF HIGHWAY DEVELOPMENT

APPROVAL • SHA REVISIONS		APPROVAL • FEDERAL HIGHWAY ADMINISTRATION	
APPROVAL	6-26-92	APPROVAL	6-26-92
REVISED	9-30-04	REVISED	
REVISED		REVISED	
REVISED		REVISED	

Maryland Department of Transportation
STATE HIGHWAY ADMINISTRATION

STANDARDS FOR HIGHWAYS AND INCIDENTAL STRUCTURES

TRAFFIC BARRIER THRIE BEAM MEDIAN BARRIER ANCHORAGE AT JERSEY SHAPE CONCRETE MEDIAN TRAFFIC BARRIER TERMINAL END

STANDARD NO. MD 605.49-02