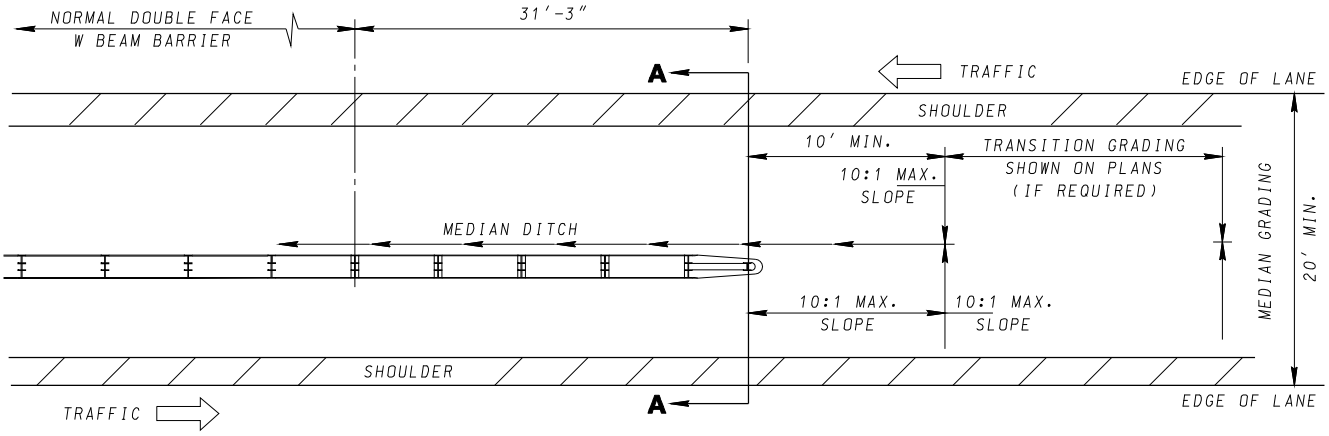

PLAN

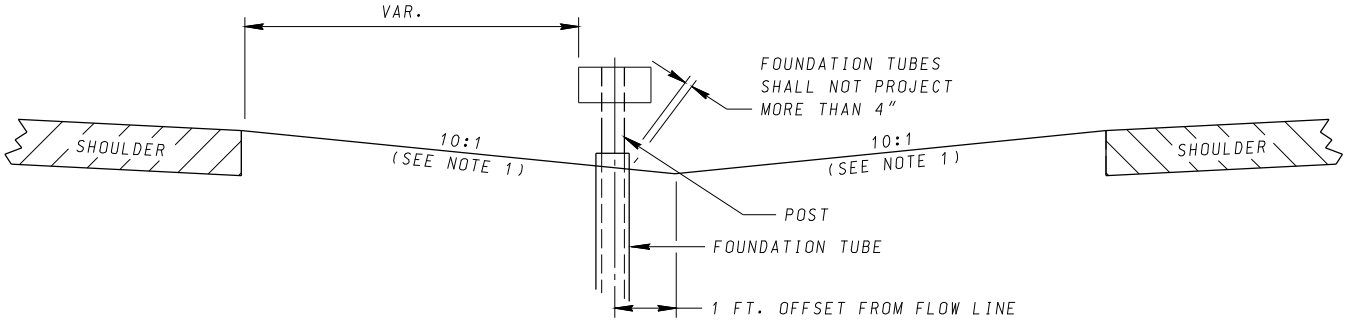

SECTION A–A

NOTES

1. 6:1 MAX GRADING IS ALLOWABLE WHEN THE BARRIER IS LOCATED 12 FT. OR MORE FROM THE OUTSIDE EDGE OF SHOULDER.
2. THIS END TREATMENT CAN ALSO BE USED IN RAMP GORES OR OTHER AREAS WHERE 2 SECTIONS OF W BEAM SYSTEM COME TOGETHER AND TERMINATE WITH ONE END TREATMENT.
3. WHEN OPPOSING ROADWAYS HAVE EQUAL ELEVATIONS THE TRAFFIC BARRIER SYSTEM SHOULD BE PLACED ON THE OPPOSITE SIDE OF THE DITCH LINE FROM APPROACHING TRAFFIC.
4. ADD DELINEATION ON END OF TREATMENT AS DIRECTED BY THE OFFICE OF TRAFFIC AND SAFETY.

SPECIFICATION 605	CATEGORY CODE ITEMS	
APPROVED	Kirk G. McCallum DIRECTOR – OFFICE OF HIGHWAY DEVELOPMENT	
SHA State Highway Administration	APPROVAL • SHA REVISIONS	APPROVAL • FEDERAL HIGHWAY ADMINISTRATION
	APPROVAL 11-10-99	APPROVAL 7-2-99
	REVISED 3-15-06	REVISED 4-5-06
	REVISED	REVISED
	REVISED	REVISED

Maryland Department of Transportation
STATE HIGHWAY ADMINISTRATION
STANDARDS FOR HIGHWAYS AND INCIDENTAL STRUCTURES

TYPE D TRAFFIC BARRIER END TREATMENT

STANDARD NO. MD 605.05