TEMPORARY TRAFFIC CONTROL TYPICAL APPLICATION
ROADSIDE SIGN /SIGN SUPPORT PLACEMENT

MD SHA'S OFFICE OF TRAFFIC AND SAFETY MAINTAINS A LIST OF APPROVED PORTABLE SIGN SUPPORTS. SIGNS SUPPORTS SHALL BE USED AT HEIGHT WHICH MEETS MANUFACTURERS' RECOMMENDATION TO MEET NCHRP 350 (LEVEL 3) CRITERIA.

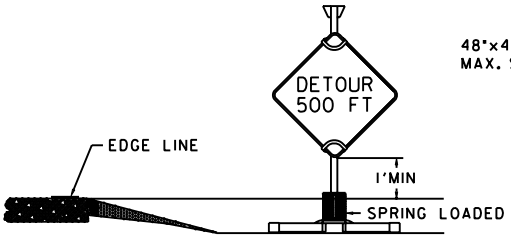

TEMPORARY

REFER TO GENERAL NOTES SECTION 4.0 FOR ADDITIONAL SKID-MOUNTED SUPPORT GUIDANCE

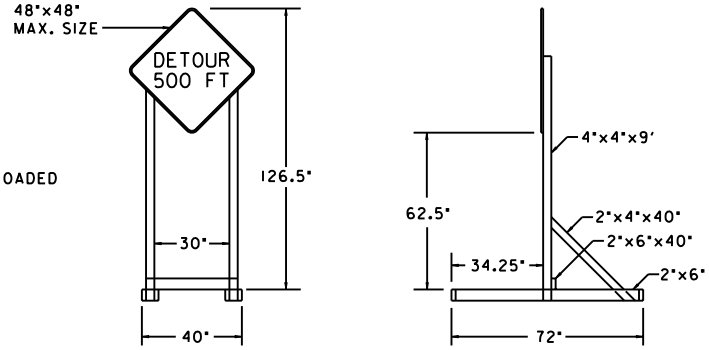

SKID MOUNTED SIGN SUPPORT

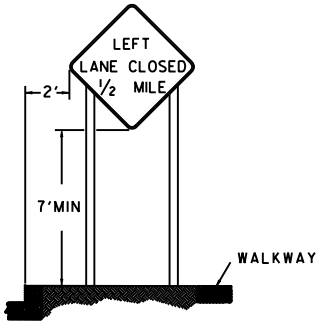

URBAN DISTRICT

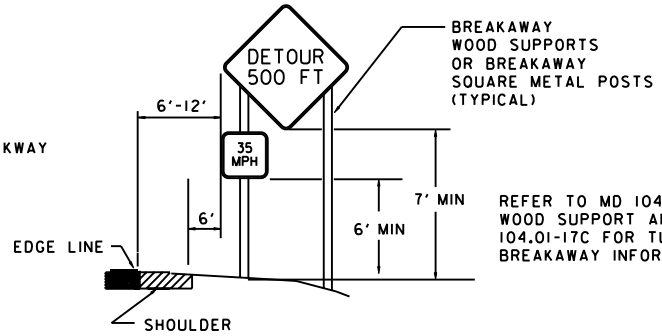

REFER TO MD 104.01-17B FOR WOOD SUPPORT AND MD 104.01-17C FOR TUBULAR STEEL BREAKAWAY INFORMATION.

RURAL DISTRICT

SPECIFICATION 104	CATEGORY CODE ITEMS
APPROVED	DIRECTOR – OFFICE OF TRAFFIC AND SAFETY

APPROVAL • SHA REVISIONS		APPROVAL • FEDERAL HIGHWAY ADMINISTRATION	
APPROVAL	8-20-03	APPROVAL	9-23-03
REVISED		REVISED	
REVISED		REVISED	
REVISED		REVISED	

Maryland Department of Transportation
STATE HIGHWAY ADMINISTRATION
STANDARDS FOR HIGHWAYS AND INCIDENTAL STRUCTURES

ROADSIDE SIGN /SIGN SUPPORT PLACEMENT

STANDARD NO. MD 104.01-17 A